F:\2017 JOBS\17001.TD Hawaii City Plaza TOD March 11 2018 home\Working DWG March 11 2018\17001.TD S001-S002- S005 GN & TYP DET.dwg, 3/22/2019 1:22:42 PM, AutoCAD PDF (General Documentation).pc3

GENERAL

1. ALL MATERIALS AND WORKMANSHIP SHALL CONFORM TO THE DRAWINGS AND SPECIFICATIONS.

2. THE STRUCTURAL DRAWINGS AND SPECIFICATIONS REPRESENT THE FINISHED STRUCTURE. THEY DO NOT INDICATE THE METHOD OF CONSTRUCTION. THE CONTRACTOR SHALL PROVIDE ALL NECESSARY MEASURES TO PROTECT THE STRUCTURE DURING CONSTRUCTION. SUCH MEASURES SHALL INCLUDE, BUT NOT TO BE LIMITED TO, BRACING, SHORING FOR LOADS DUE TO CONSTRUCTION EQUIPMENT, WIND, SEISMIC, ETC. OBSERVATION VISITS TO THE SITE BY THE STRUCTURAL ENGINEER SHALL NOT INCLUDE INSPECTION OF THE ABOVE ITEMS.

3. THE CONTRACTOR SHALL BE SOLELY RESPONSIBLE FOR ALL EXCAVATIONS PROCEDURES, INCLUDING LAGGING, SHORING, AND PROTECTION OF ADJACENT PROPERTY STRUCTURES, STREETS AND UTILITIES IN ACCORDANCE WITH ALL NATIONAL, STATE, AND LOCAL SAFETY ORDINANCES.

4. SEE ARCHITECTURAL DRAWINGS FOR SIZE AND LOCATION OF ALL FLOOR AND WALL OPENINGS, FLOOR FINISHES, SLOPES, DEPRESSIONS, ETC.

5. SEE MECHANICAL PLUMBING AND ELECTRICAL DRAWINGS FOR SIZE AND LOCATION OF ALL OPENINGS REQUIRED FOR DUCTS, PIPES AND ALL PIPE SLEEVES, ELECTRICAL CONDUITS AND OTHER ITEMS TO BE EMBEDDED IN CONCRETE OR OTHERWISE INCORPORATED IN STRUCTURAL WORK. OPENINGS, POCKETS, ETC. LARGER THAN 6" SHALL NOT BE PLACED IN SLABS, DECKS, BEAMS, JOISTS, COLUMNS, WALLS, ETC. UNLESS SPECIFICALLY DETAILED ON THE STRUCTURAL DRAWINGS. NOTIFY THE STRUCTURAL ENGINEER WHEN DRAWINGS BY OTHERS SHOW OPENINGS, POCKETS, ETC, LARGER THAN 6" NOT SHOWN ON THE STRUCTURAL DRAWINGS BUT WHICH ARE LOCATED IN STRUCTURAL MEMBERS.

6. CONSTRUCTION MATERIALS SHALL BE SPREAD OUT IF PLACED ON FRAMED FLOORS OR ROOFS. LOAD SHALL NOT EXCEED THE DESIGN LIVE LOAD PER SQUARE FOOT. PROVIDE ADEQUATE SHORING AND/OR BRACING WHERE STRUCTURE HAS NOT ATTAINED DESIGN STRENGTH.

7. SPECIAL NOTE: THE ARCHITECTURAL DRAWINGS ARE CONSIDERED A PART OF THE STRUCTURAL DESIGN AND ARE TO BE USED TO DEFINE DETAIL CONFIGURATIONS, SUCH AS THE RELATIVE LOCATION OF STRUCTURAL MEMBERS, ITS ELEVATIONS, HOLES & OPENINGS, ETC.

8. DESIGN CRITERIA

A. CODE

B. DESIGN LIVE LOADS

1. RESIDENTIAL UNITS . . . . 40 PSF (REDUCIBLE)
2. ROOF . . . . 20 PSF (REDUCIBLE)
3. EXIT CORRIDORS, STAIRS . . . . 100 PSF (REDUCIBLE)
4. PUBLIC AREAS . . . . 100 PSF (REDUCIBLE)
5. PARKING . . . . 40 PSF (NON-REDUCIBLE)
6. LIGHT STORAGE . . . . 125 PSF (NON-REDUCIBLE)
7. MECHANICAL . . . . WT. OF EQUIPMENT

C. WIND-105 MPH, EXPOSURE "C", Kzt = 1.2, Kd = 0.75

D. D. SEISMIC IMPORTANCE FACTOR = 1.0; SEIMIC USE GROUP = I

S_S = 0.615g S_1 = 0.179g

S_{DS} = 0.536g S_{D1} = 0.248g

SEISMIC DESIGN CATEGORY (SDC) = C

R = 5; ORDINARY REINFORCED CONCRETE SHEAR WALLS

C_S = 0.107W

ANALYSIS PROCEDURE: EQUIVALENT LATERAL FORCE PROCEDURE

9. SHOP DRAWINGS SHALL BE SUBMITTED TO THE ARCHITECT FOR REVIEW PRIOR TO FABRICATION. PRODUCT SPECIFICATIONS WITH ICC OR ICBO REPORTS SHALL BE SUBMITTED TO THE ARCHITECT FOR REVIEW WHEN REQUIRED.

10. NOTES AND DETAILS ON DRAWINGS SHALL TAKE PRECEDENCE OVER GENERAL NOTES AND TYPICAL DETAILS.

11. THE CONTRACTOR SHALL BE SOLELY RESPONSIBLE FOR COORDINATING WORK OF ALL TRADES AND SHALL CHECK ALL DIMENSIONS. ALL DISCREPANCIES SHALL BE CALLED TO THE ATTENTION OF THE ENGINEER AND BE RESOLVED BEFORE PROCEEDING WITH THE WORK. DIMENSIONS AND ALL WORK SHALL BE FIELD VERIFIED BY THE CONTRACTOR PRIOR TO CONSTRUCTION. IF ANY DISCREPANCIES DO OCCUR, THE CONTRACTOR SHALL BRING THIS TO THE IMMEDIATE ATTENTION OF THE ENGINEER FOR POSSIBLE MODIFICATION AND NECESSARY REDESIGN TO ACCOMMODATE FIELD CONDITIONS.

12. WHERE A CONSTRUCTION DETAIL IS NOT SHOWN OR NOTED, THE DETAIL SHALL BE THE SAME AS FOR OTHER SIMILAR WORK.

13. DETAILS LABELED AS "TYPICAL" AND NOTES AND DETAILS ON THE STRUCTURAL DRAWINGS INDICATE METHOD OF WORK; AND ARE INTENDED TO BE USED WHERE THEY APPLY. UNLESS THE CONDITION IS SPECIFICALLY DETAILED OR REFERENCED, USE TYPICAL DETAILS WHETHER OR NOT THEY ARE CROSS-REFERENCED ELSEWHERE.

14. DO NOT CUT OR DRILL THROUGH ANY POST TENSION TENDONS AND REBAR WHILE DRILLING FOR ANY POST-POUR INSTALLED FASTENERS OR ANCHORS IN POST TENSION SLABS AND BEAMS. DO NOT CORE THROUGH ANY POST TENSION TENDONS OR REBAR. CONTRACTOR SHALL LOCATE EXISTING POST TENSION TENDONS AND REBAR WITH PACHOMETER OR EQUIVALENT DEVICE PRIOR TO DRILLING OR CORING ANY CONCRETE ELEMENTS.

FOUNDATION

1. FOUNDATION DESIGN IS BASED ENTIRELY ON THE "GEOTECHNICAL ENGINEERING REPORT" : MFA PROJECT NO. 16689-001 DATED MAY 19, 2017 BY MASA FUJIOKA & ASSOCIATES AND ITS ADDENDUMS.

2. THE CONTRACTOR SHALL REVIEW THE GEOTECHNICAL REPORT AND SUBSEQUENT ADDENDUMS AND COMPLY WITH ALL OF THE REQUIREMENTS. THE GEOTECHNICAL REPORT IS A PART OF THIS PROJECT CONSTRUCTION DOCUMENTS.

3. CONTRACTOR SHALL PROVIDE FOR DE-WATERING OF EXCAVATIONS FROM EITHER SURFACE WATER, GROUND WATER, OR SEEPAGE.

4. CONTRACTOR SHALL PROVIDE FOR DESIGN AND INSTALLATION OF ALL CRIBBING, SHEATHING AND SHORING REQUIRED TO SAFELY RETAIN THE EARTH BANKS.

5. ALL PILES SHALL BE APPROVED BY THE GEOTECHNICAL ENGINEER PRIOR TO CONSTRUCTING THE PILECAPS.

6. ALL EXCAVATIONS SHALL BE PROPERLY BACKFILLED. DO NOT PLACE BACKFILL BEHIND RETAINING WALLS BEFORE CONCRETE OR CMU HAS ATTAINED FULL DESIGN STRENGTH. CONTRACTOR SHALL BRACE OR PROTECT ALL BUILDING AND PIT WALLS BELOW GRADE FROM LATERAL LOADS UNTIL ATTACHING FLOORS ARE COMPLETELY IN PLACE AND HAVE ATTAINED FULL DESIGN STRENGTH.

7. DEWATERING OF THE SITE DURING CONSTRUCTION IS THE SOLE RESPONSIBILITY OF THE CONTRACTOR. PRECAUTIONS SHALL BE TAKEN BY THE CONTRACTOR NOT TO UNDERMINE EXISTING FOUNDATIONS. METHOD OF DEWATERING AND CALCULATIONS FOR THE APPROPRIATE SYSTEM ARE THE SOLE RESPONSIBILITY OF THE CONTRACTOR.

8. PROVIDE WATERSTOPS IN ALL VERTICAL CONSTRUCTION JOINTS IN BASEMENT WALLS AND ELEVATOR PIT WALLS.

9. SLABS ON GROUND SHALL BE PLACED ON SELECT GRANULAR FILL COMPACTED TO 95 PERCENT MODIFIED PROCTOR MAXIMUM DRY DENSITY (ASTM D1557).

CONCRETE

1. ALL CONCRETE UNLESS OTHERWISE NOTED SHALL BE REGULAR WEIGHT HARD ROCK (150 PCF) AND SHALL CONFORM TO ASTM C-33. PORTLAND CEMENT SHALL CONFORM TO ASTM C-150 TYPE I OR II.

2. ALL PHASES OF WORK PERTAINING TO THE CONCRETE CONSTRUCTION SHALL CONFORM TO THE "BUILDING CODE REQUIEREMENTS FOR REINFORCED CONCRETE" (ACI 318-05) WITH MODIFICATIONS AS NOTED IN THE DRAWINGS OR SPECIFICATIONS.

3. STRUCTURAL CONCRETE 28-DAYS MINIMUM STRENGTH:

AUGER-CAST PILES AND PILECAPS . . . . 5,000 PSI
GRADE BEAMS . . . . 5,000 PSI
TIE BEAMS . . . . 5,000 PSI
SLAB ON GRADE . . . . 4,000 PSI
SUSPENDED CONC. SLAB & BEAMS . . . . 5,700 PSI
COLUMNS . . . . SEE COL. SCHEDULE
WALLS . . . . SEE WALL SCHEDULE
ALL OTHER CONCRETE . . . . 4,000 PSI

TYPICAL REINFORCING YIELD STRESS ON SLABS IS 60 KSI. SEE SCHEDULE FOR REINFORCING YIELD STRESS ON COLUMNS.

4. CONCRETE MIXES SHALL BE DESIGNED BY A QUALIFIED TESTING LABORATORY AND SUBMITTED TO THE ENGINEER FOR REVIEW.

5. CLEAR COVER OF CONCRETE OVER OUTER REINFORCING BARS, SHALL BE AS FOLLOWS UNLESS OTHERWISE NOTED:

A. CONCRETE POURED DIRECTLY
AGAINST EARTH .... 3" CLEAR TO REINFORCEMENT

B. CONCRETE EXPOSED TO
EARTH OR WEATHER .... 1 1/2" CLEAR FOR #5 BAR AND SMALLER
2" FOR #6 BAR AND LARGER

C. SLAB ON GRADE .... SEE DETAILS

D. SUSPENDED SLAB .... SEE DETAILS

6. ALL REINFORCING BARS, ANCHOR BOLTS, EMBEDDED HOLDOWNS AND OTHER CONCRETE INSERTS SHALL BE WELL SECURED IN POSITION PRIOR TO PLACING CONCRETE.

7. PROVIDE SLEEVES FOR PLUMBING AND ELECTRICAL OPENING IN CONCRETE BEFORE PLACING. DO NOT CUT ANY REINFORCEMENT IN CONFLICT. CORING IN CONCRETE IS NOT PERMITTED EXCEPT AS SHOWN. NOTIFY THE STRUCTURAL ENGINEER IN ADVANCE OF CONDITIONS NOT SHOWN ON THE DRAWINGS.

8. CONDUIT OR PIPE SIZE (O.D.) SHALL NOT EXCEED 30 PERCENT OF SLAB THICKNESS AND SHALL BE PLACED UNDER THE LAYER OF REINFORCEMENT UNLESS SPECIFICALLY DETAILED OTHERWISE. CONCENTRATIONS OF CONDUITS OR PIPES SHALL NOT BE ALLOWED, EXCEPT WHERE DETAILED FOR OPENINGS ARE PROVIDED.

9. AN EVAPORATION RETARDER SHALL BE USED TO PREVENT PLASTIC SHRINKAGE FORMATION OF ALL SLABS. (EG. EUCOBAR, CONFILM, SIKAFILM, OR EQUIVALENT)

10. PARAPET AND SPANDREL WALLS SHALL HAVE CONTROL JOINTS PER ARCHITECTURAL DRAWINGS, IF NONE SHOWN, PROVIDE CONTROL JOINTS AT INTERVALS NOT EXCEEDING TWICE THE WALL HEIGHT.

11. W/C RATIO SHALL BE MAXIMUM 0.40 W/C RATIO.

CONSTRUCTION JOINTS

1. ALL CONSTRUCTION JOINTS IN WALLS SHALL BE KEYED IN ACCORDANCE WITH THE TYPICAL CONSTRUCTION JOINT DETAILS SHOWN ON STRUCTURAL DRAWINGS OR AT THE CONTRACTOR'S OPTION, SHALL BE AN INTENTIONALLY ROUGHENED CONSTRUCTION JOINT.

2. AN INTENTIONALLY ROUGHENED CONSTRUCTION JOINTS IS DEFINED AS THE FOLLOWING: THE SURFACE OF ROUGHNED JOINTS SHALL BE SAND BLASTED OR ROUGHENED WITH A CHIPPING HAMMER TO EXPOSE THE AGGREGATE EMBEDDED IN THE PREVIOUS POUR. THE EXPOSED AGGREGATE SHALL PROTRUDE A MINIMUM OF 1/4 INCH. ALL SURFACES OF CONSTRUCTION JOINTS SHALL BE CLEANED AND LAITANCE REMOVED. IMMEDIATELY BEFORE NEW CONCRETE IS PLACED, ALL CONSTRUCTION JOINTS SHALL BE WETTED AND STANDING WATER REMOVED.

3. VERTICAL CONSTRUCTION JOINTS IN WALLS SHALL BE LOCATED AT A MAXIMUM SPACING OF 30'-0" AND SHALL BE COORDINATED WITH ARCHITECTURAL JOINTS AND TREATMENTS. ALL CONSTRUCTION JOINTS IN SLABS, BEAMS, AND GIRDERS SHALL BE OFFSET A DISTANCE EQUAL TO TWICE THE WIDTH OF THE BEAM. THE CONTRACTOR SHALL SUBMIT THE PROPOSED LOCATIONS OF CONSTRUCTION JOINTS TO THE ARCHITECT/ENGINEER FOR ACCEPTANCE BEFORE STARTING CONSTRUCTION.

4. CONSTRUCTION AND CONTROL JOINTS FOR SLABS ON GROUND SHALL BE IN ACCORDANCE WITH THE TYPICAL SLAB ON GROUND DETAILS. ISOLATION JOINTS SHALL BE LOCATED AT COLUMNS PER TYPICAL SLAB ON GROUND DETAILS.

REINFORCING STEEL

1. ALL REINFORCING STEEL SHALL BE DETAILED AND PLACED IN CONFORMANCE WITH THE "BUILDING CODE REQUIREMENTS FOR REINFORCED CONCRETE" (ACI 318-05), AND "ACI DETAILING MANUAL" LATEST EDITION (SP-66) AS MODIFIED BY THE PROJECT DRAWINGS AND SPECIFICATIONS.

2. REINFORCING BARS SHALL CONFORM TO ASTM A-615 GRADE 60 REQUIREMENTS FOR #3 THRU #10 BARS.

3. ANCHOR BOLTS, DOWELS AND OTHER EMBEDDED ITEMS ARE TO BE SECURELY TIED IN PLACE BEFORE CONCRETE IS POURED.

4. ALL REINFORCING BAR BENDS SHALL BE MADE COLD.

5. WELDED FIRE FABRIC (WWF), IF USED, SHALL CONFORM TO ASTM A-185. FOR SLABS ON GRADE LAP A MIN. OF 6" OR ONE FULL MESH, WHICHEVER GREATER.

6. REINFORCING SPLICES SHALL BE MADE ONLY WHERE INDICATED ON THE DRAWINGS.

7. DOWELS BETWEEN FOOTING AND WALL COLUMNS SHALL BE THE SAME GRADE, SIZE AND SPACING OR NUMBER AS THE VERTICAL REINFORCING, RESPECTIVELY, U.O.N.

8. WELDING OF REINFORCEMENT STEEL SHALL CONFORM TO AWS D1.4 "AWS STRUCTURAL WELDING CODE-REINFORCING STEEL" OF THE AMERICAN WELDING SOCIETY. REINFORCING STEEL WHICH IS WELDED SHALL CONFORM TO ASTM A706. REINFORCING STEEL NOT CONFORMING TO ASTM A706 MAY BE USED IF MATERIAL PROPERTIES OF THE REINFORCING STEEL CONFORM TO AWS D1.4.

9. CONTRACTOR SHALL SUBMIT REBAR PLACEMENT SHOP DRAWINGS. SHOP DRAWINGS SHALL INCLUDE RELEVANT PENETRATIONS THRU WALLS, SLABS, BEAMS, ETC.

CONCRETE MASONRY (CMU)

1. CONCRETE MASONRY UNITS SHALL CONFORM TO ASTM C90, GRADE N-II, NORMAL WEIGHT.

2. PORTLAND CEMENT TYPE SHALL BE AS SPECIFIED FOR CONCRETE.

3. REINFORCING BARS - SEE NOTES UNDER "REINFORCING STEEL" FOR REQUIREMENTS.

4. MORTAR MIX SHALL CONFORM TO ASTM C270, TYPE S, AND ATTAIN A COMPRESSIVE STRENGTH OF 1800 PSI AT 28 DAYS.

5. GROUT SHALL CONFORM TO ASTM C476, AND ATTAIN A COMPRESSIVE STRENGTH OF 2000 PSI AT 28 DAYS. F'm = 1500 PSI.

6. PROVIDE A MINIMUM OF 1/2" GROUT BETWEEN MAIN REINFORCING AND MASONRY UNITS.

7. USE LOW LIFT CONSTRUCTION: MAXIMUM GROUT POUR HEIGHT IS 5 FT.

8. GROUT ALL CELLS SOLID UNLESS OTHERWISE NOTED.

9. CELLS SHALL BE IN VERTICAL ALIGNMENT. DOWELS IN FOOTING SHALL BE SET TO ALIGN w/ CORES CONTAINING REINFORCING STEEL.

10. CONCRETE SURFACES SHALL BE CLEANED OF ALL LAITANCE PRIOR TO SETTING BLOCKS.

11. ALL WALLS SHALL BE CONSTRUCTED IN CONVENTIONAL RUNNING BOND UNLESS OTHERWISE NOTED. REFER TO ARCHITECTURAL DRAWINGS FOR SURFACE TEXTURE AND HEIGHT OF UNITS, LAYING PATTERNS AND JOINT TYPE.

12. PREFABRICATED REINFORCING-BAR-POSITIONERS SHALL BE USED TO CORRECTLY LOCATE AND SECURE VERTICAL AND HORIZONTAL REINFORCING STEEL IN MASONRY WALLS.

13. USE VIBRATOR TO CONSOLIDATE ALL GROUT.

14. IF WORK IS STOPPED LONGER THAN ONE (1) HOUR, PROVIDE HORIZONTAL CONSTRUCTION JOINT BY STOPPING THE GROUT 1 1/2" BELOW THE TOP OF THE BLOCK.

15. TOPS OF NON-BEARING CMU WALLS SHALL BE LATERALLY CONNECTED TO STRUCTURAL FRAMING OR SLABS. SEE CMU WALL DETAILS.

MISCELLANEOUS

1. ALL STAIRWAYS ON THIS PROJECT ARE PRE-ENGINEERED STEEL STAIRS UNLESS OTHERWISE NOTED. SEE ARCHITECTURAL DRAWINGS FOR STAIR CONFIGURATION, IF CONCRETE TOPPING IS REQUIRED, ETC. PRE-ENGINEERED STEEL STAIR MANUFACTURER SHALL PROVIDE ALL FRAMING MEMBERS AND HARDWARE FOR THE STAIRS INCLUDING STEEL EMBED PLATES AND ALL CONNECTIONS TO CONNECT THE STAIR TO THE PRIMARY STRUCTURE, CONTRACTOR TO SUBMIT SHOP DRAWINGS AND STRUCTURAL CALCULATIONS PREPARED BY A HAWAII LICENSED STRUCTURAL ENGINEER TO THE ARCHITECT.

2. CONTRACTOR SHALL BE RESPONSIBLE FOR THE DESIGN AND CONSTRUCTION OF ALL STRUCTURAL STEEL SUPPORT PLATFORMS FOR ALL MECHANICAL AND ELECTRICAL EQUIPMENT SUCH AS COOLING TOWERS, EMERGENCY GENERATORS, ETC. SEE MECHANICAL AND ELECTRICAL DRAWINGS FOR LOCATIONS AND REQUIREMENTS. CONTRACTOR TO SUBMIT SHOP DRAWINGS AND STRUCTURAL CALCULATIONS PREPARED BY A HAWAII LICENSED STRUCTURAL ENGINEER TO THE ARCHITECT FOR REVIEW.

3. CONTRACTOR SHALL BE RESPONSIBLE FOR THE DESIGN AND CONSTRUCTION FOR ALL ARCHITECTURAL PRECAST CONCRETE PANELS, INCLUDING PROVIDING ALL STRUCTURAL STEEL EMBED PLATES AND CONNECTIONS. CONTRACTOR TO SUBMIT SHOP DRAWINGS AND STRUCTURAL CALCULATIONS PREPARED BY A HAWAII LICENSED ENGINEER TO THE ARCHITECT FOR REVIEW.

4. CONTRACTOR SHALL BE RESPONSIBLE FOR THE DESIGN AND CONSTRUCTION FOR ALL CURTAIN WALL PANELS, INCLUDING PROVIDING ALL STRUCTURAL STEEL EMBED PLATES AND CONNECTIONS. CONTRACTOR TO SUBMIT SHOP DRAWINGS AND STRUCTURAL CALCULATIONS FOR REVIEW.

5. PROVIDE METHODS OF ISOLATING DISSIMILAR CLADDING METALS AND CONNECTORS FROM STRUCTURAL STEEL SUPPORT ELEMENTS TO PREVENT GALVANIC CORROSION.

CODE-REQUIRED SPECIAL INSPECTION

THE OWNER SHALL EMPLOY SPECIAL INSPECTORS FOR THE FOLLOWING TYPES OF CONSTRUCTION AS PER IBC2006 SECTON 1701:

1. CONCRETE PLACEMENT AND COMPRESSION TEST (AT 3-DAY, 7-DAY AND 28-DAY)
2. ANCHOR BOLTS INSTALLED IN CONCRETE AND MASONRY
3. REINFORCING STEEL
4. POST-TENSIONING TENDON PLACEMENT AND STRESSING
5. STRUCTURAL MANSONRY
7. SOILS COMPACTION TEST (BY SOILS ENGINEER)
8. CONCRETE AUGER-CAST PILE INSTALLATION (BY SOILS ENGINEER)

LEGEND

CONCRETE

CMU — SMW- (DENOTES STRUCTURAL CMU WALL)

STEEL — NMW- (DENOTES NON-STRUCTURAL CMU WALL)

FLOOR DEPRESSION

CONCRETE PAD

FINISH FLOOR OR TOP OF SLAB ELEVATION

+100.0 (-3") — TOP OF SLAB BELOW FINISH FLOOR

C-2 — COLUMN MARK AND NUMBER, SEE SCHEDULE

PC-2 — FOOTING MARK AND NUMBER, SEE SCHEDULE

INDICATES TEST PILE

TP - XX — INDICATES PILE NO.

WF - 3 — WALL FOOTING AND NUMBER, SEE SCHEDULE

TB - 5 — TIE BEAM AND NUMBER, SEE SCHEDULE

W - 05 — WALL MARK AND NUMBER, SEE SCHEDULE

GB - 2 — GRADE BEAM AND NUMBER, SEE SCHEDULE

2B - 15 — BEAM MARK AND NUMBER, SEE SCHEDULE

STRUCTURAL ABBREVIATIONS

ABA.	ANCHOR BOLT	LLH	LONG LEG HORIZONTAL
ALT.	ALTERNATE	LLV	LONG LEG VERTICAL
APPROX.	APPROXIMATE	LONGIT.	LONGITUDINAL
ARCH.	ARCHITECTURAL	MAX.	MAXIMUM
(B)	BOTTOM REINFORCEMENT	M.B.	MACHINE BOLT
BLDG.	BUILDING	MECH.	MECHANICAL
BM.	BEAM	MFR.	MANUFACTURER
BOT.	BOTTOM	MIN.	MINIMUM
B.S.	BOTH SIDES	MISC.	MISCELLANEOUS
BTWN	BETWEEN	N.I.C.	NOT IN CONTRACT
C.I.P.	CAST IN PLACE	N.T.S.	NOT TO SCALE
C.J.	CONSTRUCTION JOINT	ø	DIAMETER
℄	CENTERLINE	O.C.	ON CENTER
CLR.	CLEAR(ANCE)	O.D.	OUTSIDE DIAMETER
C.M.U.	CONCRETE MASONRY UNIT	O.F.	OUTSIDE FACE
COL.	COLUMN	O.H.	OPPOSITE HAND
CONC.	CONCRETE	OPNG.	OPENING
CONN.	CONNECTION	OPP.	OPPOSITE
C.P.	COMPLETE PENETRATION	PART.	PARTIAL
CONSTR.	CONSTRUCTION	PL.	PLATE
CONT.	CONTINUOUS	PLWD.	PLYWOOD
DBL	DOUBLE	P.P.	PARTIAL PENETRATION
DET.	DETAIL	PT.	POINT
DIA.	DIAMETER	R.O.	ROUGH OPENINGS
DIM.	DIMENSION	RAD.	RADIUS
DWG.	DRAWING	REINF.	REINFORCED, REINFORCEMENT
EA.	EACH	REQ'D	REQUIRED
E.F.	EACH FACE	SCHED.	SCHEDULE
E.J.	EXPANSION JOINT	SECT.	SECTION
ELEV.	ELEVATOR	SHT.	SHEET
EQ.	EQUAL	SIM.	SIMILAR
E.S.	EACH SIDE	SL.	SLOPE
E.W.	EACH WAY	S.O.G.	SLAB-ON-GRADE
EXP.	EXPANSION	SPECS.	SPECIFICATIONS
EXIST.	EXISTING	SQ.	SQUARE
FDN.	FOUNDATION	STD.	STANDARD
FL.	FLOOR	STIFF.	STIFFENER
F.O.C.	FACE OF CONCRETE	STRUCT.	STRUCTURAL
FIN.	FINISH	SYM.	SYMMETRICAL
FTG.	FOOTING	(T)	TOP (REINFORCEMENT)
GA.	GAUGE	T&B	TOP AND BOTTOM
GALV.	GALVANIZED	THRU	THROUGH
G.L.	GRID LINE	T.O.F.	TOP OF FOOTING
(H)	HORIZONTAL (REINFORCEMENT)	T.O.S.	TOP OF STEEL
HORIZ.	HORIZONTAL	T.O.W.	TOP OF WALL
H.P.	HIGH POINT	TRANSV.	TRANSVERSE
I.D.	INSIDE DIAMETER (DIMENSION)	TSL.	TOP OF SLAB
INFO.	INFORMATION	TYP.	TYPICAL
INT.	INTERIOR	U.O.N.	UNLESS OTHERWISE NOTED
INTERM.	INTERMEDIATE	(V)	VERTICAL (REINFORCEMENT)
JT.	JOINT	VERT.	VERTICAL
		W/	WITH
		WD.	WOOD
		W.W.F.	WELDING WIRE FABRIC

AISE
ALLISON IDE
STRUCTURAL ENGINEERS LLC
900 Fort Street Mall Suite 1670
Honolulu, HI 96813-3717
808 536 2108
johnallison@allisonide.com

JOHN S. ALLISON
LICENSED PROFESSIONAL ENGINEER
No. 5933-S
HAWAII, U.S.A.
Signature
Expiration Date:

This work was prepared by me or under my supervision. Construction of this project will be under my observation. Observation as defined in Section 16-115-2 of Hawaii Administrative Rules 9-12-02 Title 16, Chapter 115, Professional Engineers, Architects, Surveyors, and Landscape Architects.

DEVELOPER:
CALIFORNIA INVESTMENT REGIONAL CENTER, LLC

PROJECT OWNER:
HAWAII CITY PLAZA, LP

Hawaii City Plaza
Honolulu, Hawaii

710 Sheridan Street
TMK 2-3-014: Parcels 002, 004, & 011

PERMIT SET

DATE 2019 MARCH 19
AISE JOB No 17001.TD

1 — 2018 11-16

SHEET TITLE
GENERAL NOTES

SHEET NO.
S001

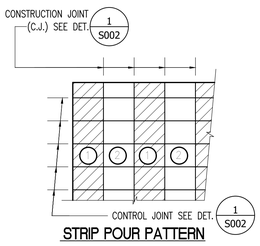

STRIP POUR PATTERN

NOTES :

1. THERE SHALL BE A MINIMUN OF 24 HOURS BETWEEN POURS 1 & 2.
2. THE DAY'S WORK AND AT EVERY 120 FT MAX.

2 SLAB ON GRADE POUR PATTERN

NOT TO SCALE

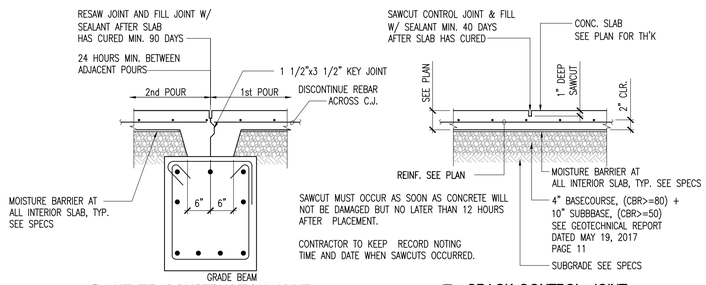

A KEYED CONSTRUCTION JOINT (C.J.)

B CRACK CONTROL JOINT (C.C.J.)

C SLAB EDGE AT WALL

D SECTION AT SLAB EDGE

NOTE:
CONSTRUCTION JOINTS ARE REQUIRED WHERE SHOWN ON PLAN. IF JOINT PATTERN NOT SHOWN, PROVIDE JOINTS NOT EXCEEDING 14'-0" IN EITHER DIRECTION AND LOCATED TO CONFORM TO BAY SPACING WHEREVER POSSIBLE (AT COLUMN CENTERLINES, HALF-BAYS, THIRD-BAYS.)

1 TYPICAL SLAB ON GRADE AND JOINT DETAILS

NOT TO SCALE

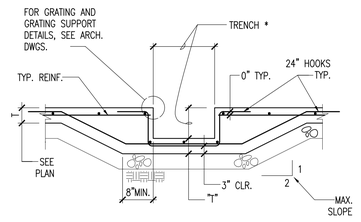

* FOR TRENCH LOCATIONS AND SIZE SEE PLANS AND/OR APPLICABLE ARCH., MECH. AND ELEC. DWGS.

6 TYPICAL TRENCH AT SLAB ON GRADE

NOT TO SCALE

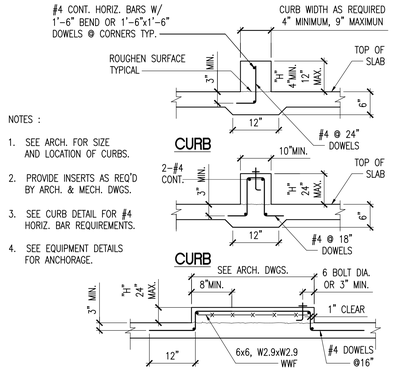

NOTES :

1. SEE ARCH. FOR SIZE AND LOCATION OF CURBS.
2. PROVIDE INSERTS AS REQ'D BY ARCH. & MECH. DWGS.
3. SEE CURB DETAIL FOR #4 HORIZ. BAR REQUIREMENTS.
4. SEE EQUIPMENT DETAILS FOR ANCHORAGE.

5 CONCRETE CURBS AND ISLANDS ON GRADE

NOT TO SCALE

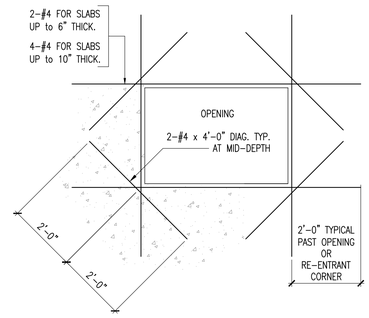

4 TYP. S.O.G. RE-ENTRANT CORNER OR BLOCKOUT DETAIL

NOT TO SCALE

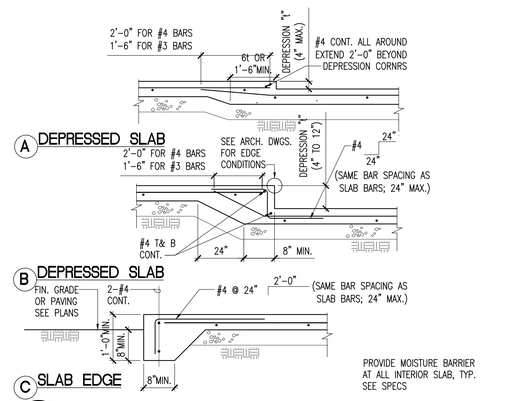

3 DEPRESSED SLAB AND SLAB EDGE DETAIL

NOT TO SCALE

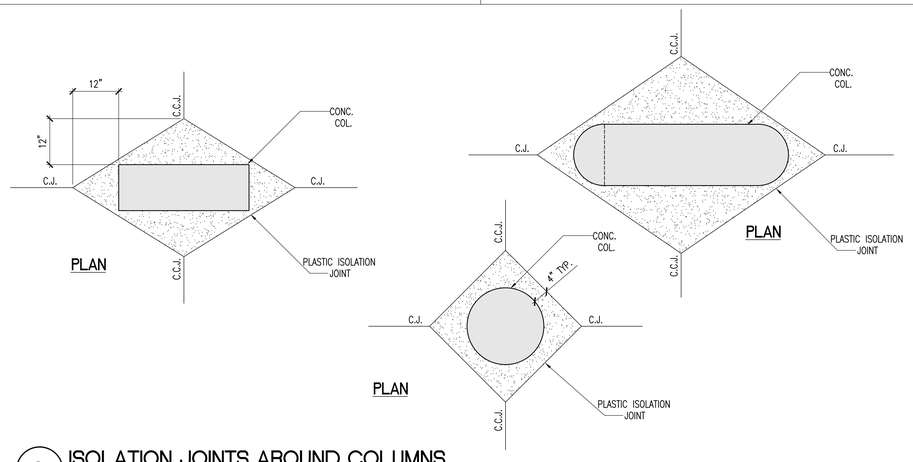

8 ISOLATION JOINTS AROUND COLUMNS

NOT TO SCALE

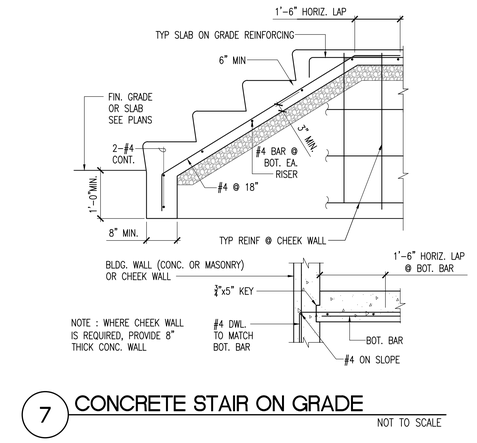

7 CONCRETE STAIR ON GRADE

NOT TO SCALE

ALLISON IDE
STRUCTURAL ENGINEERS LLC
900 Fort Street Mall Suite 1670
Honolulu, HI 96813-3717
808 536 2108
johnallison@allisonide.com

JOHN S. ALLISON
LICENSED PROFESSIONAL ENGINEER
No. 5933 S
HAWAII, U.S.A.
Signature
Expiration Date:

This work was prepared by me or under my supervision. Construction of this project will be under my observation. Observation as defined in Section 16-115-2, Hawaii Administrative Rules 3-12-02 Title 16, Chapter 115, Professional Engineers, Architects, Surveyors, and Landscape Architects.

DEVELOPER:
CALIFORNIA INVESTMENT REGIONAL CENTER, LLC

PROJECT OWNER:
HAWAII CITY PLAZA, LP

Hawaii City Plaza
Honolulu, Hawaii
710 Sheridan Street
TMK 2-3-014: Parcels 002, 004, & 011

PERMIT SET

DATE 2019 MARCH 19
AISE JOB No 17001.TD

1	2019 11-16	

SHEET TITLE

TYPICAL DETAILS CONCRETE SLAB

SHEET NO.

S002

2017 AISE\17001.TD Hawaii City Plaza TCI March 11 2018 Items\Working DWG March 11 2018\17001.TD S001 - S002 S005 ON & TYP DET.dwg, 3/25/2019 11:48:39 AM, DWG To PDF.pc3

BAR DIA.	MIN. D_2	MIN. D_1
#3	1 1/2"	2 1/4"
#4	2"	3"
#5	2 1/2"	3 3/4"
#6	4 1/2"	4 1/2"
#7	5 1/4"	5 1/4"
#8		6"
#9		9 1/2"
#10		10 3/4"
#11		12"

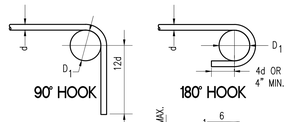

NOTES:

1. ALL BENDS SHALL BE MADE COLD
2. #14 & #18 BARS SHALL BE BEND-TEST AND APROVED PRIOR TO BENDING.

3 BAR BENDS (REINF.)

NOT TO SCALE

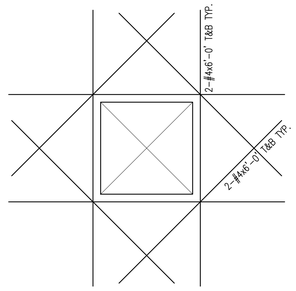

2 REINFORCEMENT AT SMALL OPENINGS ON SLAB (24"x24" MAX.)

NOT TO SCALE

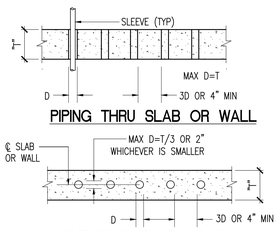

NOTE : WHERE CLEAR DISTANCE BETWEEN SLEEVES IS IMPOSSIBLE OR MAX D IS EXCEEDED, THIS AREA SHALL BE TREATED AS AN OPENING PER TYPICAL DETAIL FOR OPENINGS IN SLAB OR WALL.

1 PIPING AND CONDUIT IN OR THRU SLAB OR WALL

NOT TO SCALE

LEGEND:

CONCRETE STRENGTH → f'c= | I | II

I. APPLIES TO BOTTOM BARS OF BEAMS, SLAB BARS *, VERTICAL WALL BARS, AND VERTICAL COLUMN BARS.

II. APPLIES TO TOP BARS OF BEAMS AND HORIZONTAL WALL STEEL.

NOTES:

1. IN STANDARD SPIRAL COLUMN USE 0.75 LAP LENGTH WITH 2'-0" MINIMUM.
2. * FOR TOP BARS WHICH HAVE MORE THAN 12" OF CONCRETE CAST BELOW THEM; USE TYPE II LAP SPLICE.
3. LAP SPLICE LENGTHS SPECIFICALLY DETAILED ON DRAWINGS SHALL GOVERN IN LIEU OF SCHEDULE LAP LENGTHS.
4. MULTIPLY SPLICES BY 1.33 FOR #5 BARS AND SMALLER AND 1.45 FOR ALL OTHER BARS IF ANY OF THE FOLLOWING OCCUR:
   A. CONCRETE COVER < db
   B. CENTER TO CENTER BAR SPACING < 3db
   db = DIAMETER OF BAR

TENSION LAP SPLICE, (HARDROCK CONCRETE), 05 ACI GRADE 60 FOR #3 THROUGH #10, GRADE 75 FOR #11

BAR SIZE	f'c=3000		f'c=4000		f'c=5000		f'c=6000		f'c=7000	
	I	II	I	II	I	II	I	II	I	II
#3	20"	26"	18"	23"	16"	21"	16"	21"	16"	21"
#4	27"	35"	24"	31"	21"	27"	19"	25"	18"	23"
#5	34"	44"	29"	38"	26"	34"	24"	31"	22"	29"
#6	41"	53"	35"	46"	31"	41"	29"	37"	27"	35"
#7	59"	76"	51"	66"	46"	59"	42"	54"	39"	50"
#8	67"	87"	58"	76"	52"	68"	48"	62"	44"	57"
#9	76"	98"	66"	85"	59"	76"	54"	70"	50"	65"
#10	85"	111"	74"	96"	66"	86"	60"	78"	56"	73"
#11	118"	153"	102"	133"	92"	119"	84"	109"	77"	101"

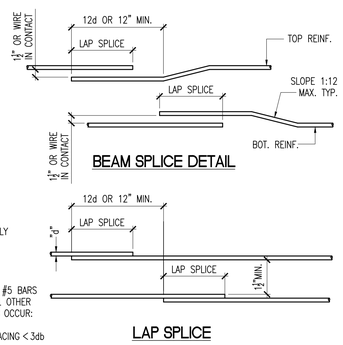

6 LAP SPLICE SCHEDULE AND BAR BENDS (REINF.)

NOT TO SCALE

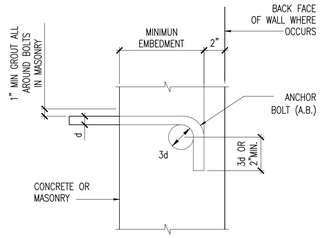

NOTE:

MINIMUN BOLT SPACING SHALL BE 12 BOLTS DIAMETERS WITH A MINIMUN EDGE DISTANCE OF 6 BOLT DIAMETERS

BOLT SIZE	EMBEDMENT
1/2"	4"
5/8"	5"
3/4"	6"
7/8"	6"
1"	7"

5 ANCHOR BOLT EMBEDMENT SCHEDULE

NOT TO SCALE

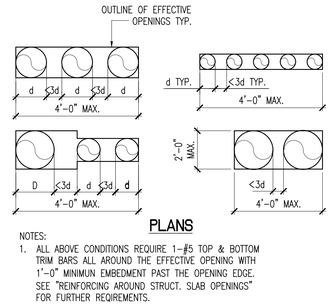

NOTES:

1. ALL ABOVE CONDITIONS REQUIRE 1-#5 TOP & BOTTOM TRIM BARS ALL AROUND THE EFFECTIVE OPENING WITH 1'-0" MINIMUN EMBEDMENT PAST THE OPENING EDGE. SEE "REINFORCING AROUND STRUCT. SLAB OPENINGS" FOR FURTHER REQIREMENTS.
2. IF THE EFFECTIVE LENGTH OF AN OPENING IS GREATER THAN 2'-0", FOLLOW THE TRIM REQUIREMENTS CALLED OUT ON THE APPROPRIATE DETAIL.

4 SLAB OPENINGS FOR MULTIPLE PIPES

NOT TO SCALE

ALLISON IDE
STRUCTURAL ENGINEERS LLC
900 Fort Street Mall Suite 1670
Honolulu, HI 96813-3717
808 536 2108
johnallison@allisonide.com

JOHN S. ALLISON
LICENSED PROFESSIONAL ENGINEER
No. 5933-S
HAWAII, U.S.A.
Signature
Expiration Date

This work was prepared by me or under my supervision. Construction of this project will be under my observation. Observation as defined in Section 16-115-2, Hawaii Administrative Rules 9-12-02 Title 16, Chapter 115, Professional Engineers, Architects, Surveyors, and Landscape Architects.

DEVELOPER:
CALIFORNIA INVESTMENT REGIONAL CENTER, LLC

PROJECT OWNER:
HAWAII CITY PLAZA, LP

Hawaii City Plaza
Honolulu, Hawaii
710 Sheridan Street
TMK 2-3-014: Parcels 002, 004, & 011

PERMIT SET

DATE 2019 MARCH 19
AISE JOB No 17001.TD

1	2018 11-16	

SHEET TITLE

TYPICAL DETAILS REINFORCEMENT

SHEET NO.

S003

C:\ASIS\17001.TD Hawaii City Plaza TDD March 11, 2018\Arch\Working DWG March 11, 2018\17001.TD_S001 - S002 - S005 GN & TYP DET.dwg, 3/22/2019 1:22:53 PM, AutoCAD PDF (General Documentation).pc3

CONCRETE WALL REINFORCING SCHEDULE			
WALL THICKNESS	BAR SIZE & SPACING EACH MAT fy = 60KSI		REMARKS
	HORIZ	VERT	
4"	#3 @ 12"	#3 @ 12"	SINGLE MAT
4 1/2" TO 6"	#4 @ 12"	#4 @ 12"	SINGLE MAT
6 1/2" TO 8"	#4 @ 10"	#4 @ 10"	SINGLE MAT
8 1/2" TO 10"	#4 @ 16"	#4 @ 16"	DOUBLE MAT
10 1/2" TO 12"	#4 @ 12"	#4 @ 12"	DOUBLE MAT
12 1/2" TO 14"	#5 @ 16"	#5 @ 16"	DOUBLE MAT
14 1/2" TO 16"	#5 @ 15"	#5 @ 15"	DOUBLE MAT

NOTES

1. THE ABOVE SHALL BE MINIMUM REINFORCING FOR NON-SHEARWALLS, NON-RETAINING WALLS. UNLESS OTHERWISE NOTED.
2. SINGLE MAT REINFORCING SHALL BE IN THE CENTER OF WALL UNLESS OTHERWISE DETAILED

2 CONCRETE WALL MINIMUM REINFORCING

NOT TO SCALE

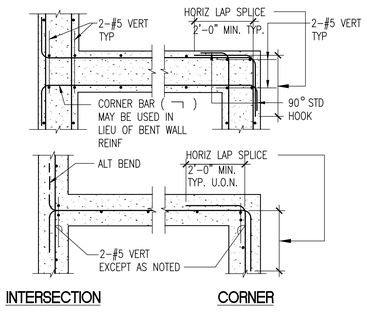

3 REINFORCING AT CONCRETE WALL INTERSECTIONS

NOT TO SCALE

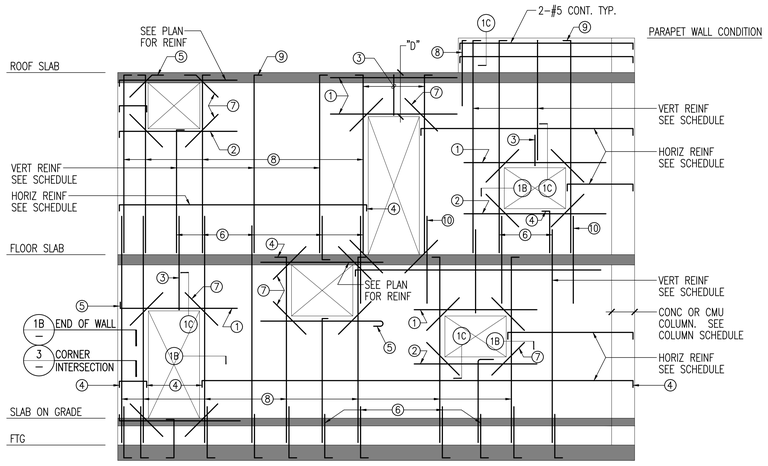

1A TYP. WALL ELEVATION

NOT TO SCALE

(1) MINIMUM WALL HEADER REINFORCING (UNLESS OTHERWISE NOTED)
- A. 2-#5 FOR OPENINGS UP TO 5'-0"
- B. 2-#6 FOR OPENINGS 5'-1" TO 7'-0"
- C. 2-#7 FOR OPENINGS 7'-1" TO 9'-0"
- D. EXTEND BARS LAP SPLICE LENGTH (2'-0" MIN.) PAST OPENINGS.

(2) ADDED BARS AT SILL
- A. 2-#5 FOR OPENINGS UP TO 5'-0"
- B. 2-#6 FOR OPENINGS 5'-1" TO 9'-0"
- C. EXTEND BARS LAP SPLICE LENGTH (2'-0" MIN.) PAST OPENINGS.

(3) VERTICAL HEADER REINFORCING
- A. #4 [] STIRRUP FOR DOUBLE MAT OR #4 ⌋ STIRRUP FOR SINGLE MAT WALLS AT [(D-3")/2] SPACING FOR HEADERS WHERE D=12" TO 30" DEEP. SPACING OF STIRRUPS NOT TO EXCEED 12"o.c.
- B. IF HEADERS ARE 30" OR DEEPER, USE DETAIL 1C/S004

(4) STND. HOOK TYP. ALL BARS AT BOUNDARIES OF WALL.

(5) WHERE EXTENSION PAST OPENINGS ARE NOT POSSIBLE, EXTEND BARS AS FAR AS POSSIBLE AND PROVIDE STND. HOOK.

(6) TYPICAL LAP SPLICES (DETAIL 6/S003); 2'-0" MINIMUM.

(7) DIAGONAL TRIM BARS
- A. 1-#4x4'-0" FOR WALL THICKNESS UP TO 8" U.O.N.
- B. 2-#4x4'-0" FOR WALL THICKNESS GREATER THAN 8" UP TO 12" U.O.N.

(8) JAMB BARS AT DOORS AND WINDOWS; 2-#5 U.O.N.

(9) 2'-0" MIN HOOK INTO CONCRETE SLAB IF SLAB OCCURS AT TOP OF WALL. IF WALL EXTENDS PAST THE TOP OF THE SLAB SUCH AS A PARAPET CONDITION USE STND. HOOK AT TOP OF WALL.

(10) STARTER DOWELS FOR VERTICAL BARS. USE SAME SIZE BAR AS VERTICAL BAR AND EXTEND LAP SPLICE LENGTH ABOVE AND BELOW FLOOR SLAB.

1 TYP. CAST-IN PLACE CONCRETE WALL REINFORCING

NOT TO SCALE

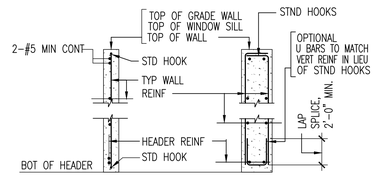

1C HEADER AND TOP OF WALL

NOT TO SCALE

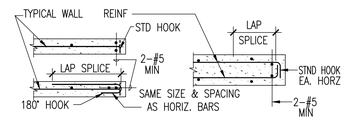

1B PLAN-JAMB OR END OF WALL

NOT TO SCALE

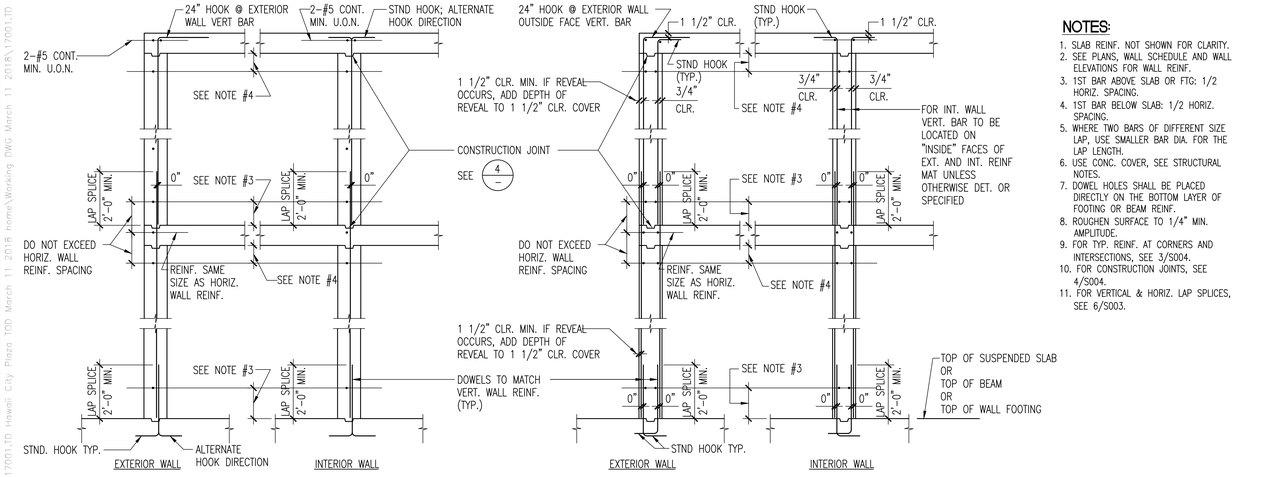

NOTES:

1. SLAB REINF. NOT SHOWN FOR CLARITY.
2. SEE PLANS, WALL SCHEDULE AND WALL ELEVATIONS FOR WALL REINF.
3. 1ST BAR ABOVE SLAB OR FTG: 1/2 HORIZ. SPACING.
4. 1ST BAR BELOW SLAB: 1/2 HORIZ. SPACING.
5. WHERE TWO BARS OF DIFFERENT SIZE LAP, USE SMALLER BAR DIA. FOR THE LAP LENGTH.
6. USE CONC. COVER, SEE STRUCTURAL NOTES.
7. DOWEL HOLES SHALL BE PLACED DIRECTLY ON THE BOTTOM LAYER OF FOOTING OR BEAM REINF.
8. ROUGHEN SURFACE TO 1/4" MIN. AMPLITUDE.
9. FOR TYP. REINF. AT CORNERS AND INTERSECTIONS, SEE 3/S004.
10. FOR CONSTRUCTION JOINTS, SEE 4/S004.
11. FOR VERTICAL & HORIZ. LAP SPLICES, SEE 6/S003.

5 TYP. WALL SECTIONS - REINFORCING

NOT TO SCALE

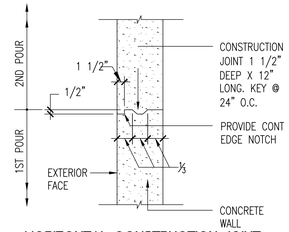

HORIZONTAL CONSTRUCTION JOINT

NOTE: PROVIDE CONT EDGE NOTCH ON BOTH FACES WHEN BOTH FACES ARE EXTERIOR

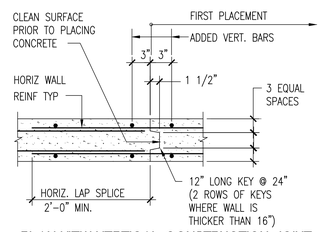

PLAN VIEW VERTICAL CONSTRUCTION JOINT

NOTES:

1. PROVIDE CONSTRUCTION JOINT @ 30'-0" O.C. MAX
2. LOCATION AND DETAIL OF JOINTS SHALL BE APPROVED BY ARCHITECT PRIOR TO CONSTRUCTING FORMS OR PLACING CONCRETE

4 TYP. CONSTRUCTION JOINT (C.J.) IN CONCRETE WALL

NOT TO SCALE

ALLISON IDE
STRUCTURAL ENGINEERS LLC
900 Fort Street Mall Suite 1670
Honolulu, HI 96813-3717
808 536 2108
johnallison@allisonide.com

JOHN S. ALLISON
LICENSED PROFESSIONAL ENGINEER
No. 5933 S
HAWAII, U.S.A.
Signature
Expiration Date:

This work was prepared by me or under my supervision. Construction of this project will be under my observation. Observation as defined in Section 16-115-2, Hawaii Administrative Rules 9-12-92 Title 16, Chapter 115, Professional Engineers, Architects, Surveyors, and Landscape Architects.

DEVELOPER:
CALIFORNIA INVESTMENT REGIONAL CENTER, LLC

PROJECT OWNER:
HAWAII CITY PLAZA, LP

Hawaii City Plaza
Honolulu, Hawaii
710 Sheridan Street
TMK 2-3-014: Parcels 002, 004, & 011

PERMIT SET

DATE 2019 MARCH 19
AISE JOB No 17001.TD

1	2018 11-16		

SHEET TITLE
CONCRETE WALL TYPICAL DETAILS

SHEET NO.
S004

G:\17001.TD Hawaii City Plaza TOD March 11 2018\Drawing (Working) DWG March 11 2018\17001.TD S001 DA & TYP REInfing 3.22.2019 12:22:59 PM, AutoCAD PDF (General Documentation).pc3

CMU WALL SCHEDULE				
WALL TYPE	WALL THICKNESS (INCHES)	BAR SIZE & SPACING EACH MAT		
		HORIZ	VERT	REMARKS
TYPICAL	6"	#4@16"	#4@16"	TYP 6" WALL U.O.N.
TYPICAL	8"	#4@16"	#4@16"	TYP 8" WALL U.O.N.
TYPICAL	12"	#4@16"	#4@16"	REBARS ON BOTH FACES

NOTES:

1. THE ABOVE IS MINIMUN REINFORCING FOR ALL CONCRETE MASONRY ELEMENTS U.O.N.
2. SINGLE MAT REINFORCING SHALL BE IN CENTER OF WALL UNLESS OTHERWISE DETAILED.
3. ALL CELLS SHALL BE GROUTED SOLID.
4. SEE 1,2,5/S005 FOR ADDED REINF. AT WALL OPENING, JAMBS, CORNERS, HEADERS, ETC.
5. TOPS ON NON-BEARING CMU WALLS SHALL BE LATERALLY CONNECTED TO STRUCTURAL FRAMING OF SLABS TYP. U.O.N. SEE DETAILS.

3 CONCRETE MASONRY WALL SCHEDULE
NOT TO SCALE

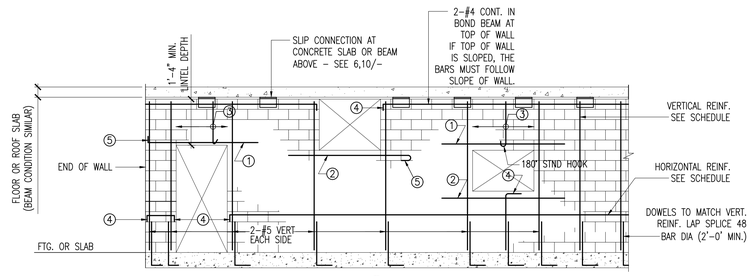

① LINTEL REINFORCING
2-#5 FOR OPENINGS UP TO 4'-0"
2-#6 FOR OPENINGS UP TO 6'-8"
EXTEND BARS 48 BAR DIA (2'-0"MIN.) PAST OPENINGS

② ADDED BARS AT SILL
2-#4 FOR OPENINGS UP TO 4'-0"
2-#5 FOR OPENINGS UP TO 6'-8"
2-#6 FOR OPENINGS UP TO 13'-0"
EXTEND BARS 48 BAR DIA (2'-0"MIN.) PAST OPENINGS

③ #3 @ 8" IN LINTELS OVER THE WINDOW AND DOOR OPENINGS WHERE LINTELS ARE DEEPER THAN 32"
#4 @ 16" VERT. BARS w/ HOOK @ END MAYBE SUBSTITUTED FOR # 3 @ 8"

④ STND. HOOK TYP. ALL BARS @ BOUNDARIES OF WALL

⑤ WHERE EXTENSION NOT POSSIBLE, EXTEND BARS AS FAR AS POSSIBLE AND PROVIDE STND. HOOK.

⑥ TYPICAL LAP SPLICES 48 BAR DIA (2'-0" MIN.)

2 TYPICAL CMU WALL ELEVATION
NOT TO SCALE

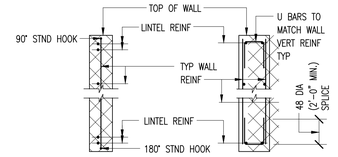

LINTEL AND TOP OF WALL

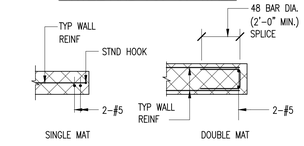

PLAN VIEW-JAMB OR END OF WALL

1 TYP. JAMB END OF WALL, LINTEL TYQ. AND TOP OF WALL
NOT TO SCALE

AISE
ALLISON IDE
STRUCTURAL ENGINEERS LLC
900 Fort Street Mall Suite 1670
Honolulu, HI 96813-3717
808 536 2108
johnallison@allisonide.com

JOHN S. ALLISON
LICENSED PROFESSIONAL ENGINEER
No. 5933-S
HAWAII, U.S.A.

Signature
Expiration Date:

This work was prepared by me or under my supervision. Construction of this project will be under my observation. Observation as defined in Section 16-115-2 of the Hawaii Administrative Rules 3-12-02 Title 16, Chapter 115, Professional Engineers, Architects, Surveyors, and Landscape Architects.

DEVELOPER:
CALIFORNIA INVESTMENT REGIONAL CENTER, LLC

PROJECT OWNER:
HAWAII CITY PLAZA, LP

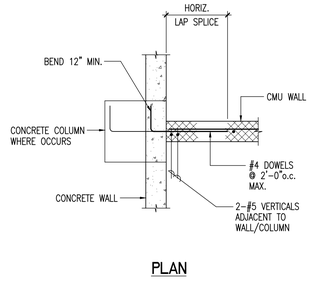

PLAN

7 CMU WALL ABUTTING CONC. WALL / COLUMN
NOT TO SCALE

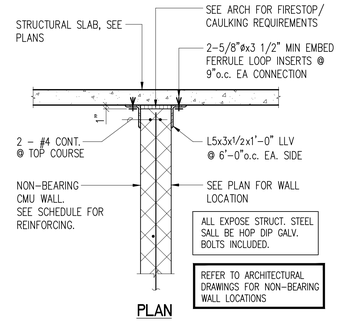

PLAN

6 NON-BEARING CMU WALL CONNECTION TO SLAB
NOT TO SCALE

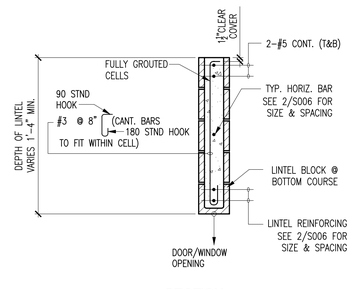

SECTION

5 TYP. LINTEL ABOVE DOOR /WINDOW (8" SINGLE MATS AND 6" CMU WALLS)
NOT TO SCALE

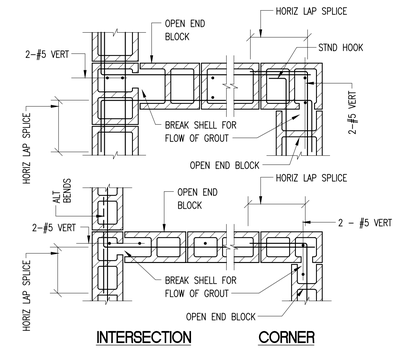

INTERSECTION CORNER

4 TYP. CMU WALL INTERSECTIONS
NOT TO SCALE

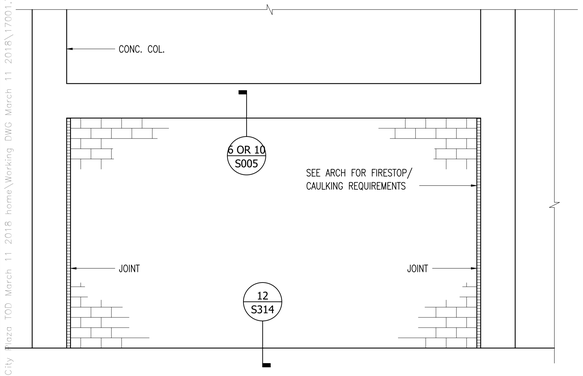

11 VERTICAL SEPARATION JOINT
NOT TO SCALE

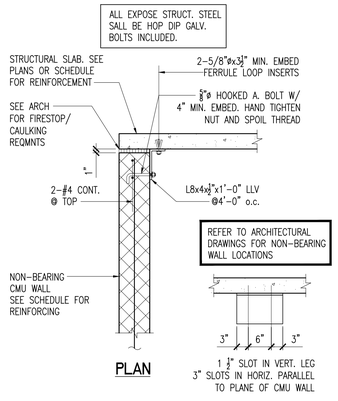

PLAN

10 NON-BEARING CMU WALL CONNECTION TO SLAB
NOT TO SCALE

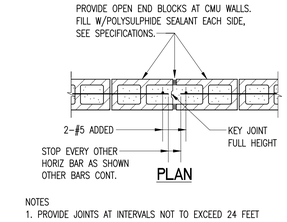

PLAN

NOTES
1. PROVIDE JOINTS AT INTERVALS NOT TO EXCEED 24 FEET EXCEPT AS NOTED.
2. HORIZONTAL REINF AT FLOOR & ROOF LINES, BOND BEAMS LINTELS AND TOP MOST COURSE OF A WALL SHALL BE CONTINUOUS THROUGH JOINT.

9 VERTICAL CONSTRUCTION JOINT IN MASONRY WALL
NOT TO SCALE

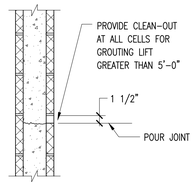

SECTION

8 VERTICAL CONSTRUCTION JOINT IN MASONRY WALL
NOT TO SCALE

Hawaii City Plaza
Honolulu, Hawaii
710 Sheridan Street
TMK 2-3-014: Parcels 002, 004, & 011

PERMIT SET

DATE 2019 MARCH 19
AISE JOB No 17001.TD

1	2018 11-16	

SHEET TITLE
CMU WALL TYPICAL DETAILS

SHEET NO.
S005

P:\17001.TD Hawaii City Plaza\Working Files\17001.TD S001-S002.dwg, 11/20/2018 11:20:41 AM, AutoCAD PDF (General Documentation).pc3
P:\17001.TD Hawaii City Plaza\Working Files\17001.TD S003-S004.dwg, 11/20/2018 11:33:04 AM, AutoCAD PDF (General Documentation).pc3
P:\17001.TD Hawaii City Plaza\Working Files\17001.TD S005.dwg, 3/22/2019 1:33:04 PM, AutoCAD PDF (General Documentation).pc3

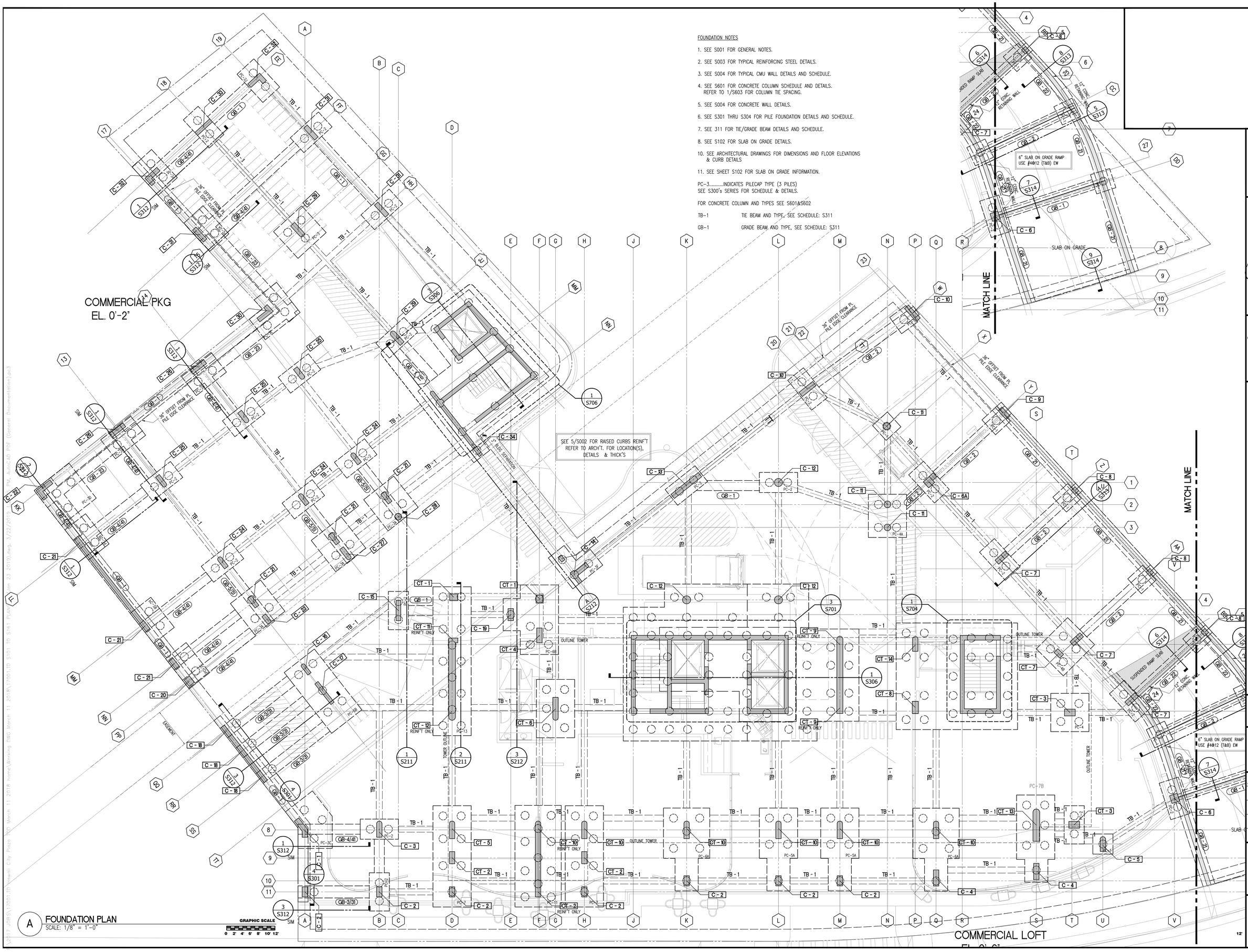

A FOUNDATION PLAN
SCALE: 1/8" = 1'-0"

FOUNDATION NOTES

1. SEE S001 FOR GENERAL NOTES.
2. SEE S003 FOR TYPICAL REINFORCING STEEL DETAILS.
3. SEE S004 FOR TYPICAL CMU WALL DETAILS AND SCHEDULE.
4. SEE S601 FOR CONCRETE COLUMN SCHEDULE AND DETAILS. REFER TO 1/S603 FOR COLUMN TIE SPACING.
5. SEE S004 FOR CONCRETE WALL DETAILS.
6. SEE S301 THRU S304 FOR PILE FOUNDATION DETAILS AND SCHEDULE.
7. SEE 311 FOR TIE/GRADE BEAM DETAILS AND SCHEDULE.
8. SEE S102 FOR SLAB ON GRADE DETAILS.
10. SEE ARCHITECTURAL DRAWINGS FOR DIMENSIONS AND FLOOR ELEVATIONS & CURB DETAILS
11. SEE SHEET S102 FOR SLAB ON GRADE INFORMATION.

PC-3.....INDICATES PILECAP TYPE (3 PILES)
SEE S300's SERIES FOR SCHEDULE & DETAILS.

FOR CONCRETE COLUMN AND TYPES SEE S601&S602

TB-1 TIE BEAM AND TYPE, SEE SCHEDULE: S311

GB-1 GRADE BEAM AND TYPE, SEE SCHEDULE: S311

AISE
ALLISON IDE
STRUCTURAL ENGINEERS LLC
900 Fort Street Mall Suite 1670
Honolulu, HI 96813-3717
808 536 2108
johnallison@allisonide.com

JOHN S. ALLISON
LICENSED PROFESSIONAL ENGINEER
No. 5933-S
HAWAII, U.S.A.
Signature
Expiration Date:

This work was prepared by me or under my supervision. Construction of this project will be under my observation. Observation as defined in Section 16-115-2 of Hawaii Administrative Rules 9-12-02 Title 16, Chapter 115, Professional Engineers, Architects, Surveyors, and Landscape Architects.

DEVELOPER:
CALIFORNIA INVESTMENT REGIONAL CENTER, LLC

PROJECT OWNER:
HAWAII CITY PLAZA, LP

Hawaii City Plaza
Honolulu, Hawaii
710 Sheridan Street
TMK 2-3-014: Parcels 002, 004, & 011

PERMIT SET

DATE 2019 MARCH 19
AISE JOB No 17001.TD

1	2018 11-16

SHEET TITLE
FOUNDATION PLAN

SHEET NO.
S101

NON BEARING CMU WALL
WHERE OCCURS
SEE ARCH'L FOR LOCATION
SEE DETAIL 12/S314 AND 6, 10, & 11/S005
FOR SLAB CONNECTION

FOR ALL
7" S.O.G.
W/#5@12"(B)
EA. WAY,
2" CLR. TYP.
SEE 1/S002

FOR ALL
10" S.O.G.:
#5@12"(B)
EA. WAY,
2" CLR. TYP.
SEE 1/S002

FOR ALL
6" S.O.G.
W/#4@12"(B)
EA. WAY,
2" CLR. TYP.
SEE 1/S002

FOR ALL
6" S.O.G.:
#4@12"(B)
EA. WAY,
2" CLR. TYP.
SEE 1/S002

wall end @ this location

1" Rock groin

OUTLINE 3RD LEVEL

A SLAB ON GRADE FRAMING PLAN
SCALE: 1/8" = 1'-0"

GRAPHIC SCALE
0 2' 4' 6' 8' 10' 12'

NOTES:

1. DENOTES 7" THICK CONCRETE SLAB ON GRADE.
2. DENOTES 10" THICK CONCRETE SLAB ON GRADE.
3. SEE S101 FOR BALANCE OF NOTES.
4. SEE 1/S002 FOR CJ AND CCJ.
5. DENOTES CMU WALL: SEE S005 FOR TYP. DETAILS

INTERIOR CMU WALLS #4 @24" (V&H)
PARTIAL GROUT: GROUT CELLS AT CELLS WITH REBAR ONLY

EXERIOR CMU WALLS #4@24" (H), #5@24" (V)
FULLY GROUTED: GROUT ALL CELLS

AISE
ALLISON IDE
STRUCTURAL ENGINEERS LLC
900 Fort Street Mall Suite 1670
Honolulu, HI 96813-3717
808 536 2108
johnallison@allisonide.com

JOHN S. ALLISON
LICENSED PROFESSIONAL ENGINEER
No. 5933-S
HAWAII, U.S.A.
Signature
Expiration Date:

This work was prepared by me or under my supervision. Construction of this project will be under my observation. Observation as defined in Section 16-115-2, Hawaii Administrative Rules 9-12-02 Title 16, Chapter 115, Professional Engineers, Architects, Surveyors, and Landscape Architects.

DEVELOPER:
CALIFORNIA INVESTMENT REGIONAL CENTER, LLC

PROJECT OWNER:
HAWAII CITY PLAZA, LP

Hawaii City Plaza
Honolulu, Hawaii

710 Sheridan Street
TMK 2-3-014: Parcels 002, 004, & 011

PERMIT SET

DATE 2019 MARCH 19
AISE JOB No 17001.TD

1	2019 11-16	

SHEET TITLE

SLAB ON GRADE PLAN

SHEET NO.

S102

2019_03_19_17001.TD Hawaii City Plaza 100 March 11, 2019 Tuesday.DWG March 11, 2019 1:20:53 PM, AutoCAD PDF (General Documentation).pc3

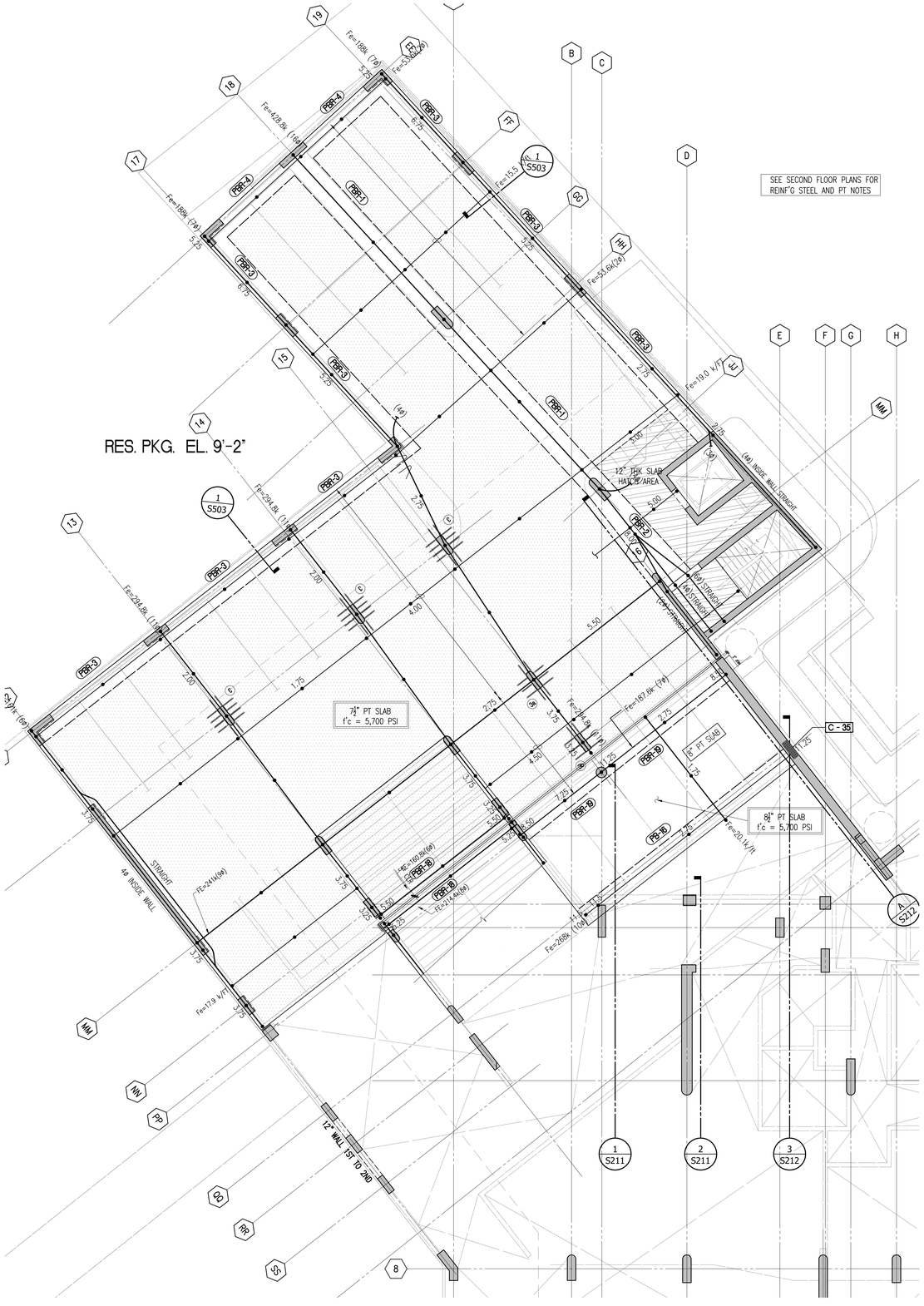

A MEZZANINE LEVEL P.T. FRAMING PLAN
SCALE: 1/8" = 1'-0"
GRAPHIC SCALE 0 2' 4' 6' 8' 10' 12'

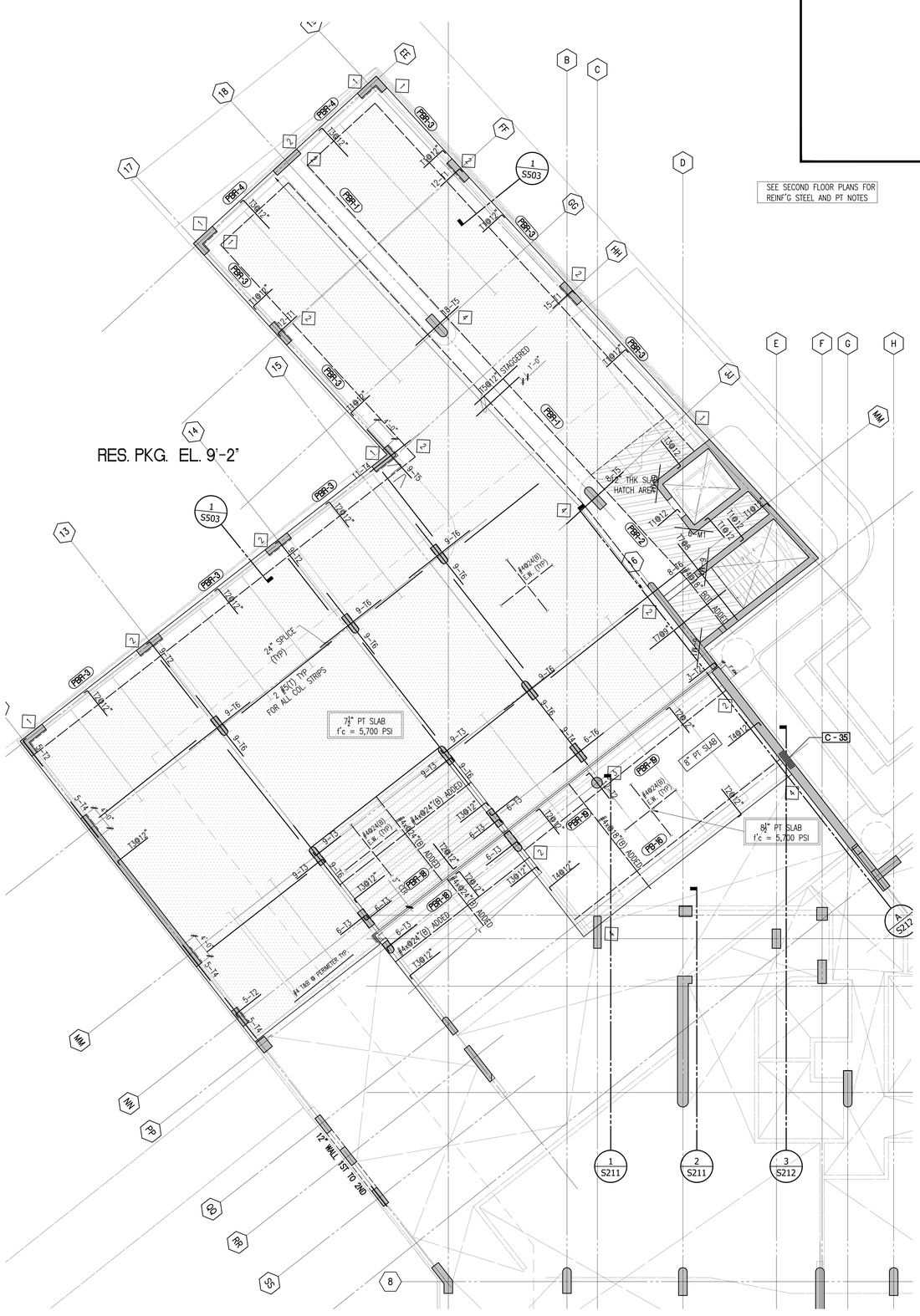

B MEZZANINE LEVEL REBAR FRAMING PLAN
SCALE: 1/8" = 1'-0"
GRAPHIC SCALE 0 2' 4' 6' 8' 10' 12'

AISE
ALLISON IDE
STRUCTURAL ENGINEERS LLC
900 Fort Street Mall Suite 1670
Honolulu, HI 96813-3717
808 536 2108
johnallison@allisonide.com

JOHN S. ALLISON
LICENSED PROFESSIONAL ENGINEER
No. 5933-S
HAWAII, U.S.A.
Signature
Expiration Date:

This work was prepared by me or under my supervision. Construction of this project will be under my observation. Observation as defined in Section 16-115-2 of Hawaii Administrative Rules 9-12-02 Title 16, Chapter 115, Professional Engineers, Architects, Surveyors, and Landscape Architects.

DEVELOPER:
CALIFORNIA INVESTMENT REGIONAL CENTER, LLC

PROJECT OWNER:
HAWAII CITY PLAZA, LP

Hawaii City Plaza
Honolulu, Hawaii
710 Sheridan Street
TMK 2-3-014: Parcels 002, 004, & 011

PERMIT SET

DATE 2019 MARCH 19
AISE JOB No 17001.TD

1	2018 11-16

SHEET TITLE
MEZZANINE LEVEL P.T. AND REBAR FRAMING PLANS

SHEET NO.
S111

PT NOTES:

1. SEE GENERAL NOTES ON S001
2. SEE ARCHITECTURAL, MECHANICAL, ELECTRICAL, ETC. DRAWINGS FOR ALL DIMENSIONS, SLAB DEPRESSIONS, SLAB EDGE LOCATION, RAISED CURBS AND ISLANDS, CONCRETE PADS, DRAINS, ETC.
3. SEE ARCHITECTURAL DRAWINGS FOR ALL REVEALS, CHAMFERS, FINISHES, ETC. FOR ALL CONCRETE ELEMENTS. VERIFY ALL DIMENSIONS AND ELEVATIONS OF STRUCTURAL ELEMENTS WITH ARCHITECTURAL DRAWINGS.
4. SEE POST TENSION SLAB NOTES AND DETAILS ON S401 SERIES DRAWINGS.
5. SEE TYPICAL DETAILS ON S400 SERIES DRAWINGS.
6. SEE FOUNDATION PLAN AND SCHEDULES FOR CONCRETE COLUMN AND WALL TYPES AND SIZES.
7. SEE S403, S404 FOR CONCRETE BEAM SCHEDULE AND DETAILS.
8. SEE ACCOMPANYING SLAB REBAR DRAWINGS FOR OTHER INFO. NOT SHOWN.
9. TYPICAL C.G.S. FOR PT TENDON IN SLABS OR BEAMS (UNO)

SLABS
- A. AT SUPPORTS : 1 ¼" BELOW TOP OF SLAB
- B. AT MIDSPAN : 1 ¼" ABOVE BOTTOM OF SLAB
- C. AT SLAB EDGE : MID DEPTH OF SLAB

BEAMS
- A. AT SUPPORTS : 2 ¾" BELOW TOP OF SLAB
- B. AT MID SPAN : 2 ¾" ABOVE BOTTOM SLAB
- C. AT BEAM EDGE : MID-DEPTH OF BEAM

10. SEE PLAN REBAR LAYOUT ON ACCOMPANYING REBAR PLANS
11. Use f'c= 5700 PSI CONCRETE AT ALL SUSPENDED FLOOR.
12. > INDICATES #4x 24" HAIRPIN SEE 11/S402.
13. PRE-ENGINEER STAIR MANUFACTURER SHALL PROVIDE ALL NECESSARY CONNECTIONS AND EMBEDS TO SUPPORT STAIRS, LANDINGS AND SUPPORT FRAME(S). USE CAST IN PLACE EMBEDS ONLY, NO DRILLED INSERTS SHALL BE ALLOWED. PROVIDE SHOP DRAWINGS FOR ENGINEERS REVIEW PRIOR TO FABRICATION.

PKG 02 18'-2"

GUEST PKG 15'-0"

SEE 5/S002 FOR RAISED CURBS REFER TO ARCH'T. FOR LOCATION & THICK'S (TYP)

RAMP TO BE BUILT AFTER POUR STRIP CONC. IS PLACED

RAMP UP TO LVL 03

RAMP DN TO PKG 02 EL. 18'-2"

RAMP DN TO PKG 01 EL. 15'-0"

7½" PT SLAB f'c = 5,700 PSI

8½" PT SLAB HATCH AREA f'c = 5,700 PSI

12" THK SLAB @ HATCH AREA

10" CONC. SLAB @ RAMP

DELAY STRESS BAND UNTIL CONCRETE MAINTAIN SHORING

RE-STRESS CABLE ONCE POUR STRIP IS FULLY CURED

TOP OF WALL BELOW

STAGE BLOCK'G

A LEVEL 2 P.T. FRAMING PLAN
SCALE: 1/8" = 1'-0"

GRAPHIC SCALE
0 2' 4' 6' 8' 10' 12'

AISE
ALLISON IDE
STRUCTURAL ENGINEERS LLC
900 Fort Street Mall Suite 1670
Honolulu, HI 96813-3717
808 536 2108
johnallison@allisonide.com

JOHN S. ALLISON LICENSED PROFESSIONAL ENGINEER No. 5933-S HAWAII, U.S.A.
Signature
Expiration Date:

This work was prepared by me or under my supervision. Construction of this project will be under my observation. Observation as defined in Hawaii Title 16, Department of Administrative Rules 3-12-02 Title 16, Chapter 115, Professional Engineers, Architects, Surveyors, and Landscape Architects.

DEVELOPER:
CALIFORNIA INVESTMENT REGIONAL CENTER, LLC

PROJECT OWNER:
HAWAII CITY PLAZA, LP

Hawaii City Plaza
Honolulu, Hawaii

710 Sheridan Street
TMK 2-3-014: Parcels 002, 004, & 011

PERMIT SET

DATE 2019 MARCH 19
AISE JOB No 17001.TD

1	2018 11-16	

SHEET TITLE
LEVEL 2 P.T. FRAMING PLAN

SHEET NO.
S121

2017_08_31_17001.00 Hawaii City Plaza 700 Mauka 11_2018 Hawaii Working Files Mauka 11_2018\17001.00_S101_02_S121_PLANS (Jan 25 2019).dwg, 1/22/2019 12:43:04 PM, Autodesk PDF (Universal).pc3

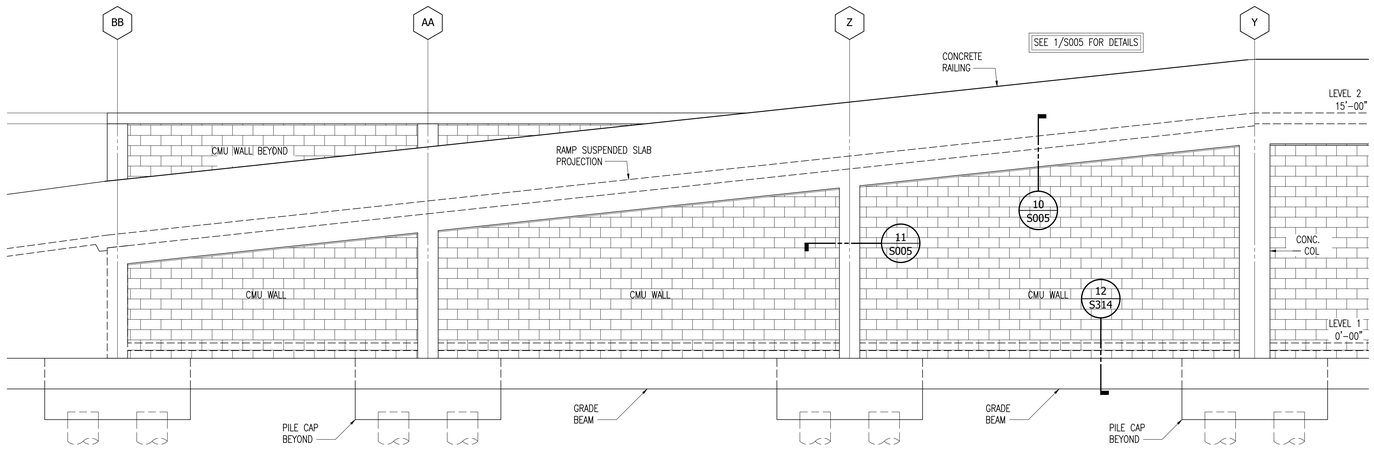

1 EXTERIOR ELEVATION AT RAMP
SCALE : 1/4" = 1'-0"

GRAPHIC SCALE
0 1' 2' 3' 4' 5' 6'

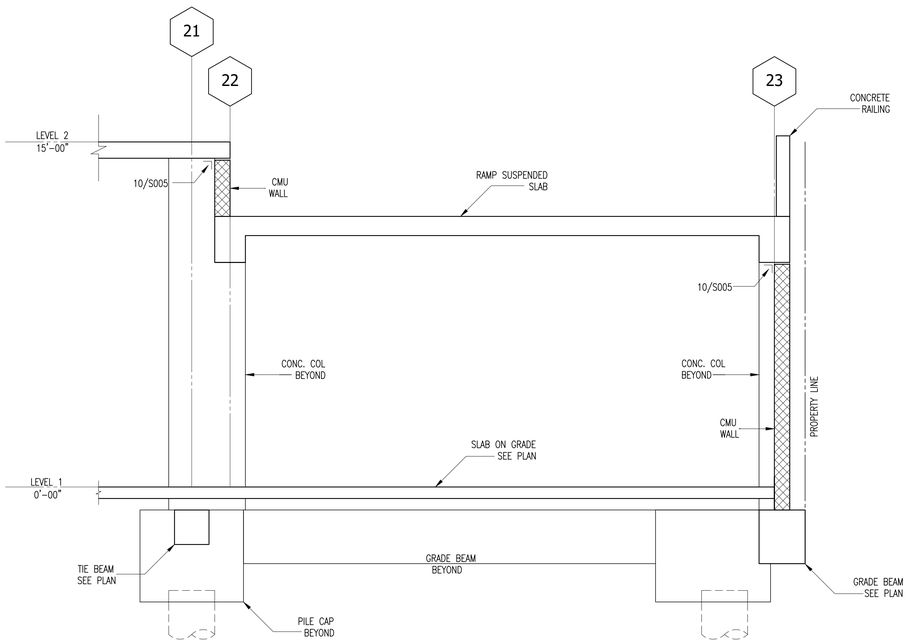

2 SECTION AT RAMP
SCALE : 3/8" = 1'-0"

GRAPHIC SCALE
0 6" 1' 2' 3' 4'

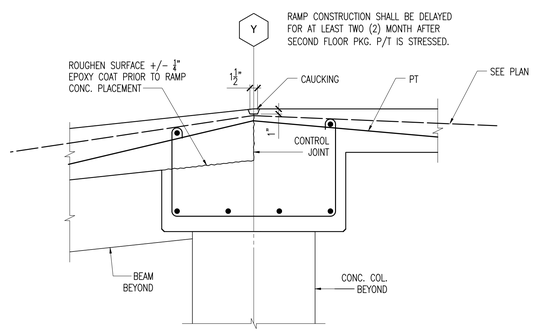

3 DETAIL
SCALE : 1" = 1'-0"

GRAPHIC SCALE
0 6" 1'

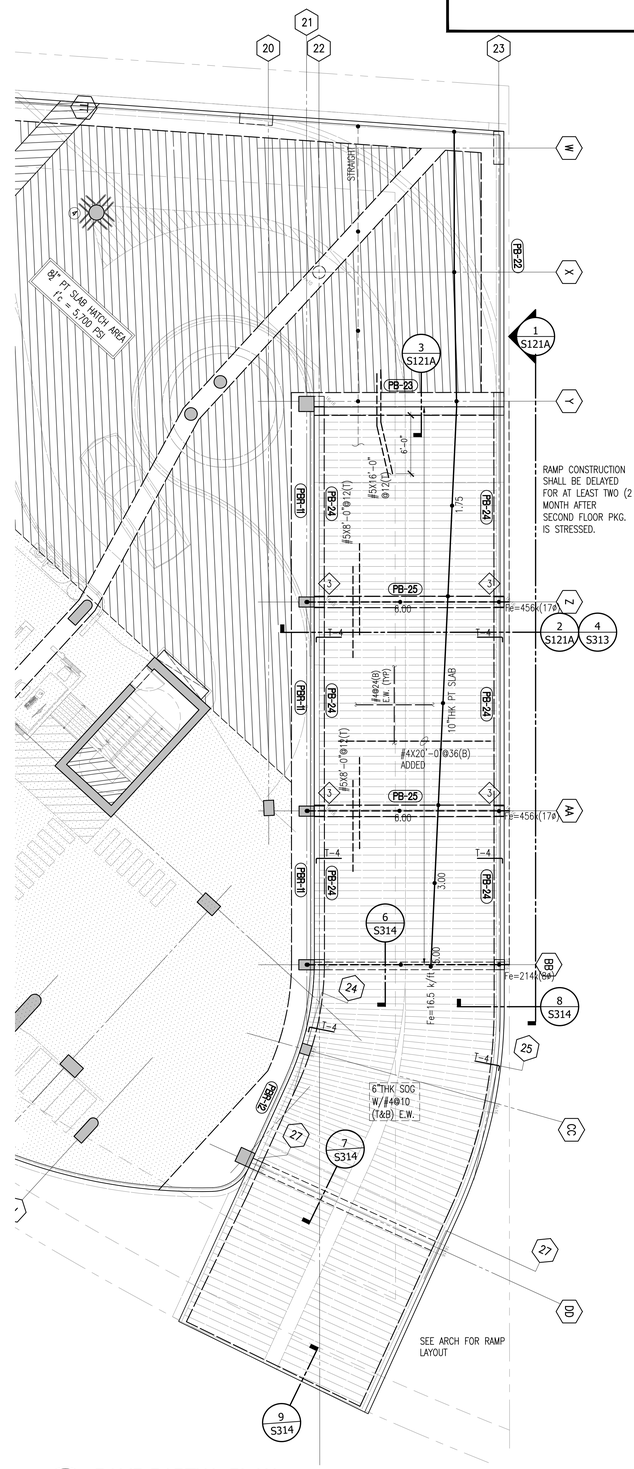

A RAMP PARTIAL PLAN
SCALE : 1/8" = 1'-0"

GRAPHIC SCALE
0 2' 4' 6' 8' 10' 12'

AISE
ALLISON IDE
STRUCTURAL ENGINEERS LLC
900 Fort Street Mall Suite 1670
Honolulu, HI 96813-3717
808 536 2108
johnallison@allisonide.com

JOHN S. ALLISON
LICENSED PROFESSIONAL ENGINEER
No. 5933-S
HAWAII, U.S.A.

Signature
Signation Date:

This work was prepared by me or under my supervision. Construction of this project will be under my observation. Observation as defined in Section 16-115-2 of Hawaii Administrative Rules 9-12-02 Title 16, Chapter 115, Professional Engineers, Architects, Surveyors, and Landscape Architects.

DEVELOPER:
CALIFORNIA INVESTMENT REGIONAL CENTER, LLC

PROJECT OWNER:
HAWAII CITY PLAZA, LP

Hawaii City Plaza
Honolulu, Hawaii
710 Sheridan Street
TMK 2-3-014: Parcels 002, 004, & 011

PERMIT SET

DATE 2019 MARCH 19
AISE JOB No 17001.TD

1	2018 11-16

SHEET TITLE
ENTRY RAMP

SHEET NO.
S121A

P:\2017 JOBS\17001.TD Hawaii City Plaza TOD March 11 2018 home\Working DWG March 11 2018\17001.TD S121A Entry Ramp.dwg, 3/22/2019 1:24:12 PM, AutoCAD PDF (General Documentation).pc3

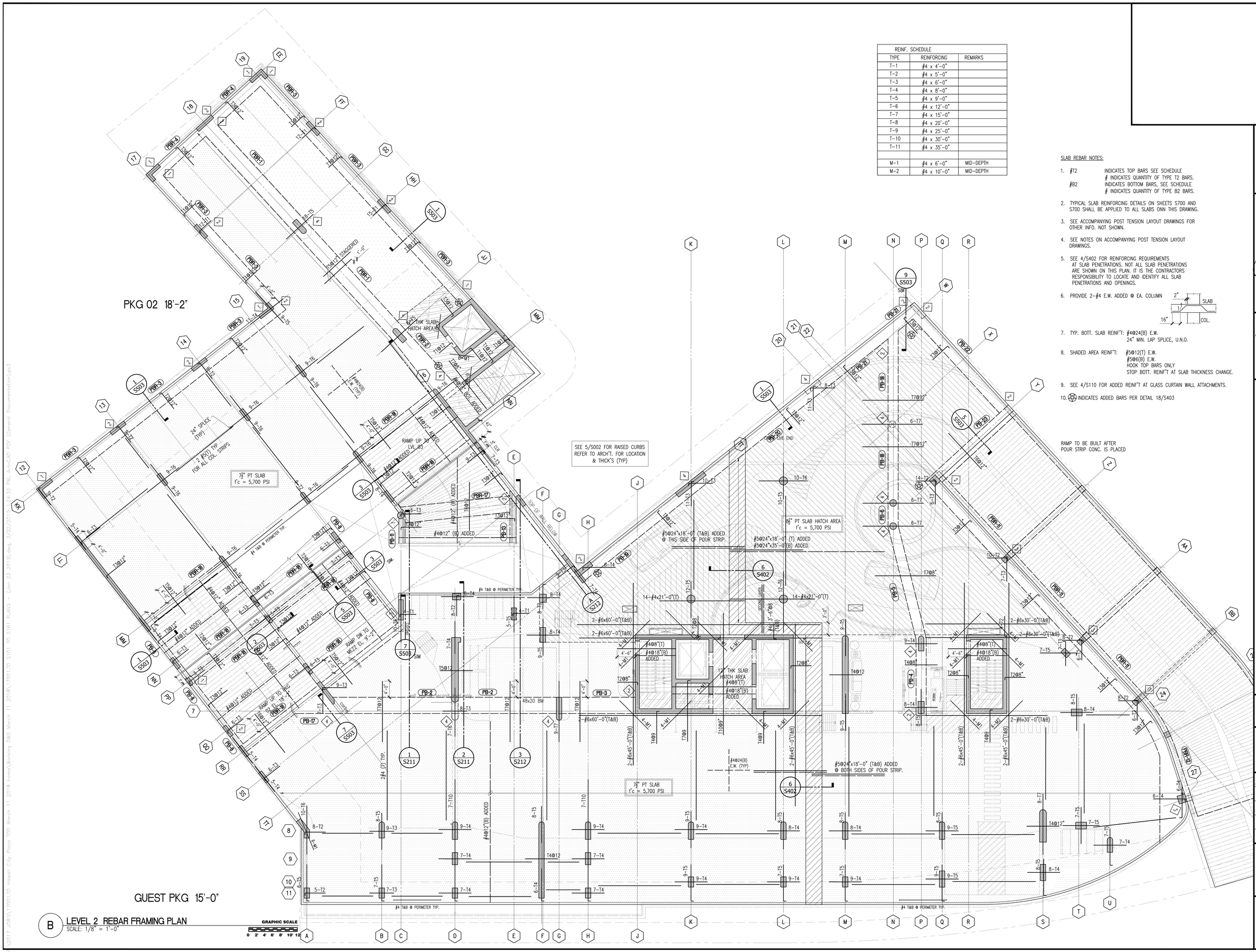

B LEVEL 2 REBAR FRAMING PLAN
SCALE: 1/8" = 1'-0"

REINF. SCHEDULE		
TYPE	REINFORCING	REMARKS
T-1	#4 x 4'-0"	
T-2	#4 x 5'-0"	
T-3	#4 x 6'-0"	
T-4	#4 x 8'-0"	
T-5	#4 x 9'-0"	
T-6	#4 x 12'-0"	
T-7	#4 x 15'-0"	
T-8	#4 x 20'-0"	
T-9	#4 x 25'-0"	
T-10	#4 x 30'-0"	
T-11	#4 x 35'-0"	
M-1	#4 x 6'-0"	MID-DEPTH
M-2	#4 x 10'-0"	MID-DEPTH

SLAB REBAR NOTES:

1. #T2 INDICATES TOP BARS SEE SCHEDULE
   # INDICATES QUANTITY OF TYPE T2 BARS.
   #B2 INDICATES BOTTOM BARS, SEE SCHEDULE
   # INDICATES QUANTITY OF TYPE B2 BARS.
2. TYPICAL SLAB REINFORCING DETAILS ON SHEETS S700 AND S700 SHALL BE APPLIED TO ALL SLABS ONN THIS DRAWING.
3. SEE ACCOMPANYING POST TENSION LAYOUT DRAWINGS FOR OTHER INFO. NOT SHOWN.
4. SEE NOTES ON ACCOMPANYING POST TENSION LAYOUT DRAWINGS.
5. SEE 4/S402 FOR REINFORCING REQUIREMENTS AT SLAB PENETRATIONS. NOT ALL SLAB PENETRATIONS ARE SHOWN ON THIS PLAN. IT IS THE CONTRACTORS RESPONSIBILITY TO LOCATE AND IDENTIFY ALL SLAB PENETRATIONS AND OPENINGS.
6. PROVIDE 2-#4 E.W. ADDED @ EA. COLUMN
7. TYP. BOTT. SLAB REINF'T: #4@24(B) E.W.
   24" MIN. LAP SPLICE, U.N.O.
8. SHADED AREA REINF'T: #5@12(T) E.W.
   #5@6(B) E.W.
   HOOK TOP BARS ONLY
   STOP BOTT. REINF'T AT SLAB THICKNESS CHANGE.
9. SEE 4/S110 FOR ADDED REINF'T AT GLASS CURTAIN WALL ATTACHMENTS.
10. INDICATES ADDED BARS PER DETAIL 18/S403

AISE
ALLISON IDE
STRUCTURAL ENGINEERS LLC
900 Fort Street Mall Suite 1670
Honolulu, HI 96813-3717
808 536 2108
johnallison@allisonide.com

JOHN S. ALLISON
LICENSED PROFESSIONAL ENGINEER
No. 5933-S
HAWAII, U.S.A.
Signature
Expiration Date

This work was prepared by me or under my supervision. Construction of this project will be under my observation. Observation as defined in Section 16-115-2 of Hawaii Administrative Rules 9-12-02 Title 16, Chapter 115, Professional Engineers, Architects, Surveyors, and Landscape Architects.

DEVELOPER:
CALIFORNIA INVESTMENT REGIONAL CENTER, LLC

PROJECT OWNER:
HAWAII CITY PLAZA, LP

Hawaii City Plaza
Honolulu, Hawaii
710 Sheridan Street
TMK 2-3-014: Parcels 002, 004, & 011

PERMIT SET

DATE 2019 MARCH 19
AISE JOB No 17001.TD

1	2018 11-16

SHEET TITLE
LEVEL 2 REBAR FRAMING PLAN

SHEET NO.
S122

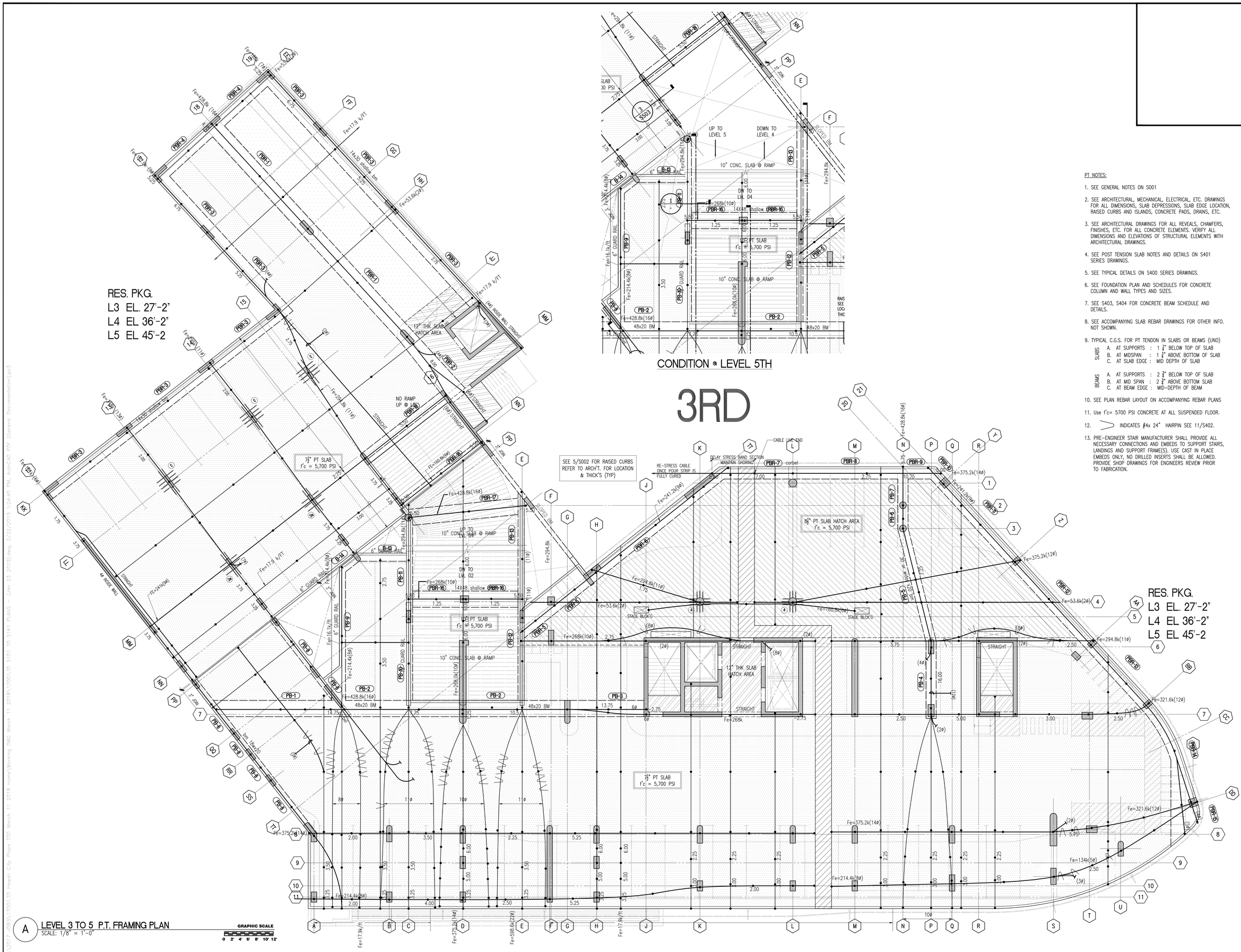

A LEVEL 3 TO 5 P.T. FRAMING PLAN
SCALE: 1/8" = 1'-0"

GRAPHIC SCALE
0 2' 4' 6' 8' 10' 12'

PT NOTES:

1. SEE GENERAL NOTES ON S001
2. SEE ARCHITECTURAL, MECHANICAL, ELECTRICAL, ETC. DRAWINGS FOR ALL DIMENSIONS, SLAB DEPRESSIONS, SLAB EDGE LOCATION, RAISED CURBS AND ISLANDS, CONCRETE PADS, DRAINS, ETC.
3. SEE ARCHITECTURAL DRAWINGS FOR ALL REVEALS, CHAMFERS, FINISHES, ETC. FOR ALL CONCRETE ELEMENTS. VERIFY ALL DIMENSIONS AND ELEVATIONS OF STRUCTURAL ELEMENTS WITH ARCHITECTURAL DRAWINGS.
4. SEE POST TENSION SLAB NOTES AND DETAILS ON S401 SERIES DRAWINGS.
5. SEE TYPICAL DETAILS ON S400 SERIES DRAWINGS.
6. SEE FOUNDATION PLAN AND SCHEDULES FOR CONCRETE COLUMN AND WALL TYPES AND SIZES.
7. SEE S403, S404 FOR CONCRETE BEAM SCHEDULE AND DETAILS.
8. SEE ACCOMPANYING SLAB REBAR DRAWINGS FOR OTHER INFO. NOT SHOWN.
9. TYPICAL C.G.S. FOR PT TENDON IN SLABS OR BEAMS (UNO)

SLABS
A. AT SUPPORTS : 1 ¼" BELOW TOP OF SLAB
B. AT MIDSPAN : 1 ¼" ABOVE BOTTOM OF SLAB
C. AT SLAB EDGE : MID DEPTH OF SLAB

BEAMS
A. AT SUPPORTS : 2 ¾" BELOW TOP OF SLAB
B. AT MID SPAN : 2 ¾" ABOVE BOTTOM SLAB
C. AT BEAM EDGE : MID-DEPTH OF BEAM

10. SEE PLAN REBAR LAYOUT ON ACCOMPANYING REBAR PLANS
11. Use f'c= 5700 PSI CONCRETE AT ALL SUSPENDED FLOOR.
12. INDICATES #4x 24" HAIRPIN SEE 11/S402.
13. PRE-ENGINEER STAIR MANUFACTURER SHALL PROVIDE ALL NECESSARY CONNECTIONS AND EMBEDS TO SUPPORT STAIRS, LANDINGS AND SUPPORT FRAME(S). USE CAST IN PLACE EMBEDS ONLY, NO DRILLED INSERTS SHALL BE ALLOWED. PROVIDE SHOP DRAWINGS FOR ENGINEERS REVIEW PRIOR TO FABRICATION.

AISE
ALLISON IDE
STRUCTURAL ENGINEERS LLC
900 Fort Street Mall Suite 1670
Honolulu, HI 96813-3717
808 536 2108
johnallison@allisonide.com

JOHN S. ALLISON
LICENSED PROFESSIONAL ENGINEER
No. 5933-S
HAWAII, U.S.A.

Signature
Expiration Date

This work was prepared by me or under my supervision. Construction of this project will be under my observation. Observation as defined in Section 16-115-2 of Hawaii Administrative Rules 9-12-02 Title 16, Chapter 115, Professional Engineers, Architects, Surveyors, and Landscape Architects.

DEVELOPER:
CALIFORNIA INVESTMENT REGIONAL CENTER, LLC

PROJECT OWNER:
HAWAII CITY PLAZA, LP

Hawaii City Plaza
Honolulu, Hawaii
710 Sheridan Street
TMK 2-3-014: Parcels 002, 004, & 011

PERMIT SET

DATE 2019 MARCH 19
AISE JOB No 17001.TD

1	2018 11-16

SHEET TITLE
LEVEL 3 - 5 P.T. FRAMING PLAN

SHEET NO.
S131

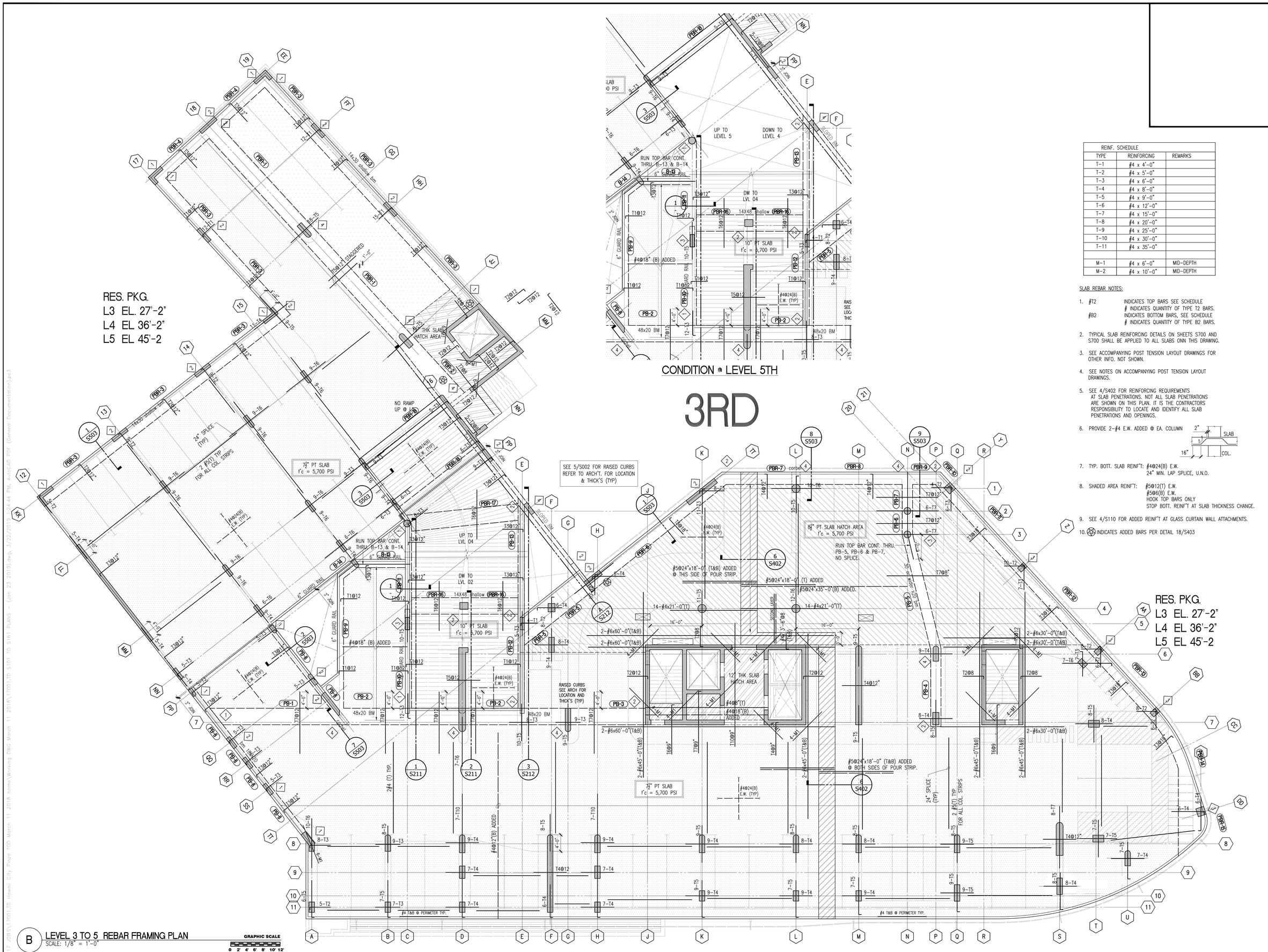

B LEVEL 3 TO 5 REBAR FRAMING PLAN
SCALE: 1/8" = 1'-0"

GRAPHIC SCALE
0 2' 4' 6' 8' 10' 12'

REINF. SCHEDULE		
TYPE	REINFORCING	REMARKS
T-1	#4 x 4'-0"	
T-2	#4 x 5'-0"	
T-3	#4 x 6'-0"	
T-4	#4 x 8'-0"	
T-5	#4 x 9'-0"	
T-6	#4 x 12'-0"	
T-7	#4 x 15'-0"	
T-8	#4 x 20'-0"	
T-9	#4 x 25'-0"	
T-10	#4 x 30'-0"	
T-11	#4 x 35'-0"	
M-1	#4 x 6'-0"	MID-DEPTH
M-2	#4 x 10'-0"	MID-DEPTH

SLAB REBAR NOTES:

1. #T2 INDICATES TOP BARS SEE SCHEDULE
   # INDICATES QUANTITY OF TYPE T2 BARS.
   #B2 INDICATES BOTTOM BARS, SEE SCHEDULE
   # INDICATES QUANTITY OF TYPE B2 BARS.
2. TYPICAL SLAB REINFORCING DETAILS ON SHEETS S700 AND S700 SHALL BE APPLIED TO ALL SLABS ONN THIS DRAWING.
3. SEE ACCOMPANYING POST TENSION LAYOUT DRAWINGS FOR OTHER INFO. NOT SHOWN.
4. SEE NOTES ON ACCOMPANYING POST TENSION LAYOUT DRAWINGS.
5. SEE 4/S402 FOR REINFORCING REQUIREMENTS AT SLAB PENETRATIONS. NOT ALL SLAB PENETRATIONS ARE SHOWN ON THIS PLAN. IT IS THE CONTRACTORS RESPONSIBILITY TO LOCATE AND IDENTIFY ALL SLAB PENETRATIONS AND OPENINGS.
6. PROVIDE 2-#4 E.W. ADDED @ EA. COLUMN
7. TYP. BOTT. SLAB REINF'T: #4@24(B) E.W. 24" MIN. LAP SPLICE, U.N.O.
8. SHADED AREA REINF'T: #5@12(T) E.W. #5@6(B) E.W. HOOK TOP BARS ONLY STOP BOTT. REINF'T AT SLAB THICKNESS CHANGE.
9. SEE 4/S110 FOR ADDED REINF'T AT GLASS CURTAIN WALL ATTACHMENTS.
10. INDICATES ADDED BARS PER DETAIL 18/S403

AISE
ALLISON IDE
STRUCTURAL ENGINEERS LLC
900 Fort Street Mall Suite 1670
Honolulu, HI 96813-3717
808 536 2108
johnallison@allisonide.com

JOHN S. ALLISON
LICENSED PROFESSIONAL ENGINEER
No. 5933-S
HAWAII, U.S.A.
Signature
Expiration Date:

This work was prepared by me or under my supervision. Construction of this project will be under my observation. Observation as defined in Section 16-115-2 of Hawaii Administrative Rules 9-12-02 Title 16, Chapter 115, Professional Engineers, Architects, Surveyors, and Landscape Architects.

DEVELOPER:
CALIFORNIA INVESTMENT REGIONAL CENTER, LLC

PROJECT OWNER:
HAWAII CITY PLAZA, LP

Hawaii City Plaza
Honolulu, Hawaii
710 Sheridan Street
TMK 2-3-014: Parcels 002, 004, & 011

PERMIT SET

DATE 2019 MARCH 19
AISE JOB No 17001.TD

1	2018 11-16

SHEET TITLE
LEVEL 3 - 5 REBAR FRAMING PLAN

SHEET NO.
S132

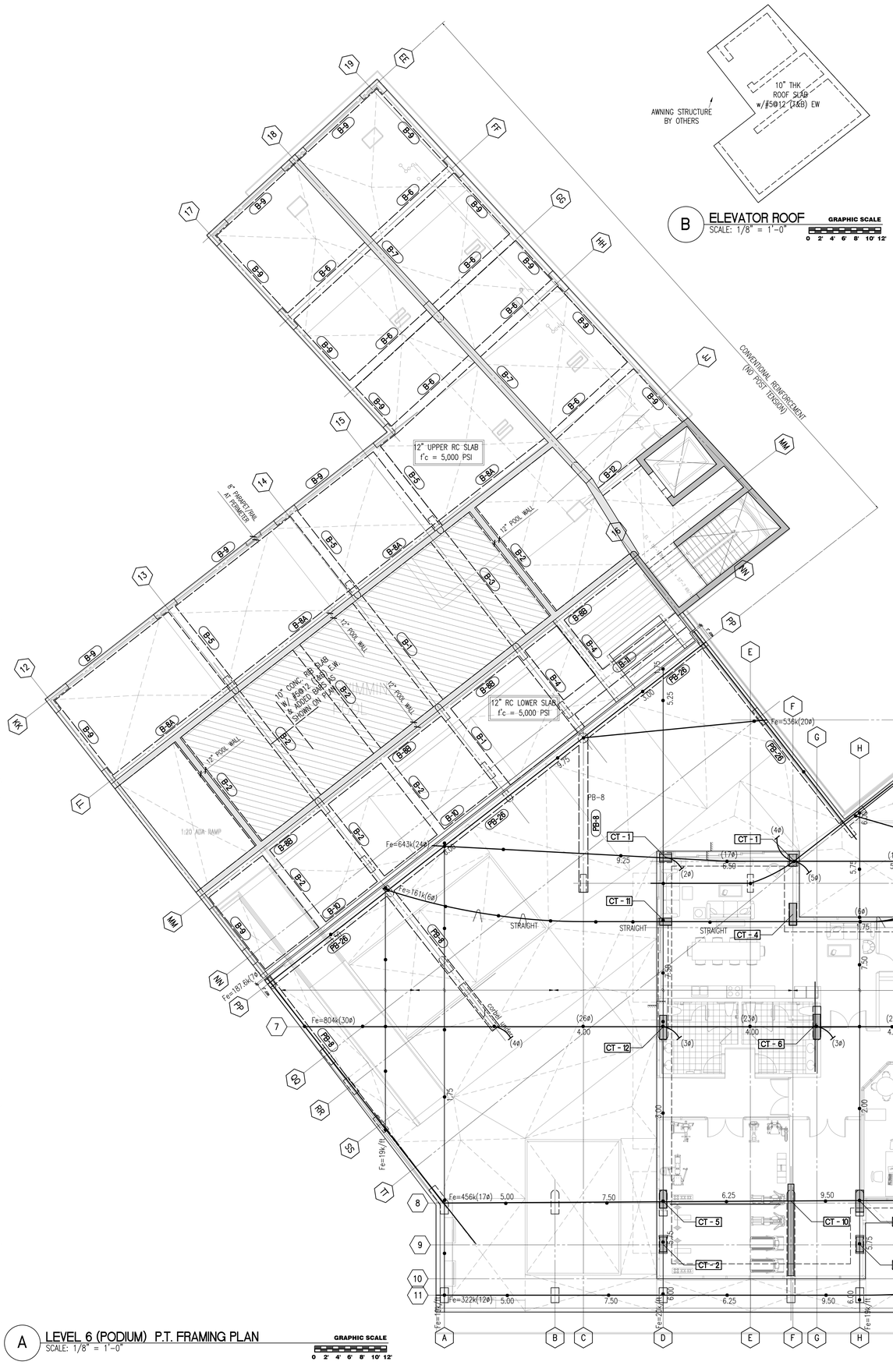

B ELEVATOR ROOF
SCALE: 1/8" = 1'-0"
GRAPHIC SCALE 0 2' 4' 6' 8' 10' 12'

A LEVEL 6 (PODIUM) P.T. FRAMING PLAN
SCALE: 1/8" = 1'-0"
GRAPHIC SCALE 0 2' 4' 6' 8' 10' 12'

PT NOTES:

1. SEE GENERAL NOTES ON S001
2. SEE ARCHITECTURAL, MECHANICAL, ELECTRICAL, ETC. DRAWINGS FOR ALL DIMENSIONS, SLAB DEPRESSIONS, SLAB EDGE LOCATION, RAISED CURBS AND ISLANDS, CONCRETE PADS, DRAINS, ETC.
3. SEE ARCHITECTURAL DRAWINGS FOR ALL REVEALS, CHAMFERS, FINISHES, ETC. FOR ALL CONCRETE ELEMENTS. VERIFY ALL DIMENSIONS AND ELEVATIONS OF STRUCTURAL ELEMENTS WITH ARCHITECTURAL DRAWINGS.
4. SEE POST TENSION SLAB NOTES AND DETAILS ON S401 SERIES DRAWINGS.
5. SEE TYPICAL DETAILS ON S400 SERIES DRAWINGS.
6. SEE FOUNDATION PLAN AND SCHEDULES FOR CONCRETE COLUMN AND WALL TYPES AND SIZES.
7. SEE S403, S404 FOR CONCRETE BEAM SCHEDULE AND DETAILS.
8. SEE ACCOMPANYING SLAB REBAR DRAWINGS FOR OTHER INFO. NOT SHOWN.
9. TYPICAL C.G.S. FOR PT TENDON IN SLABS OR BEAMS (UNO)

SLABS
- A. AT SUPPORTS : 1 1/4" BELOW TOP OF SLAB
- B. AT MIDSPAN : 1 1/4" ABOVE BOTTOM OF SLAB
- C. AT SLAB EDGE : MID DEPTH OF SLAB

BEAMS
- A. AT SUPPORTS : 2 3/4" BELOW TOP OF SLAB
- B. AT MID SPAN : 2 3/4" ABOVE BOTTOM SLAB
- C. AT BEAM EDGE : MID-DEPTH OF BEAM

10. SEE PLAN REBAR LAYOUT ON ACCOMPANYING REBAR PLANS
11. Use f'c= 5700 PSI CONCRETE AT ALL SUSPENDED FLOOR.
12. INDICATES #4x 24" HAIRPIN SEE 11/S402.
13. PRE-ENGINEER STAIR MANUFACTURER SHALL PROVIDE ALL NECESSARY CONNECTIONS AND EMBEDS TO SUPPORT STAIRS, LANDINGS AND SUPPORT FRAME(S). USE CAST IN PLACE EMBEDS ONLY. NO DRILLED INSERTS SHALL BE ALLOWED. PROVIDE SHOP DRAWINGS FOR ENGINEERS REVIEW PRIOR TO FABRICATION.

ALLISON IDE
STRUCTURAL ENGINEERS LLC
900 Fort Street Mall Suite 1670
Honolulu, HI 96813-3717
808 536 2108
johnallison@allisonide.com

JOHN S. ALLISON
LICENSED PROFESSIONAL ENGINEER
No. 5933-S
HAWAII, U.S.A.
Signature
Expiration Date:

This work was prepared by me or under my supervision. Construction of this project will be under my observation. Observation as defined in Section 16-115-2 of the Hawaii Administrative Rules 3-12-02 Title 16, Chapter 115, Professional Engineers, Architects, Surveyors, and Landscape Architects.

DEVELOPER:
CALIFORNIA INVESTMENT REGIONAL CENTER, LLC

PROJECT OWNER:
HAWAII CITY PLAZA, LP

Hawaii City Plaza
Honolulu, Hawaii
710 Sheridan Street
TMK 2-3-014: Parcels 002, 004, & 011

PERMIT SET

DATE 2019 MARCH 19
AISE JOB No 17001.TD

1	2018 11-16

SHEET TITLE
LEVEL 6 (PODIUM) P.T. FRAMING PLAN

SHEET NO.
S141

J:\2017 JOBS\17001.TD Hawaii City Plaza\100 Design\100 Working\S00 Notes\17001.TD S101 TO S161 PLANS - (Jan 23 2019).dwg, 1/24/2019 1:24:59 PM, AutoCAD PDF (General Documentation).pc3

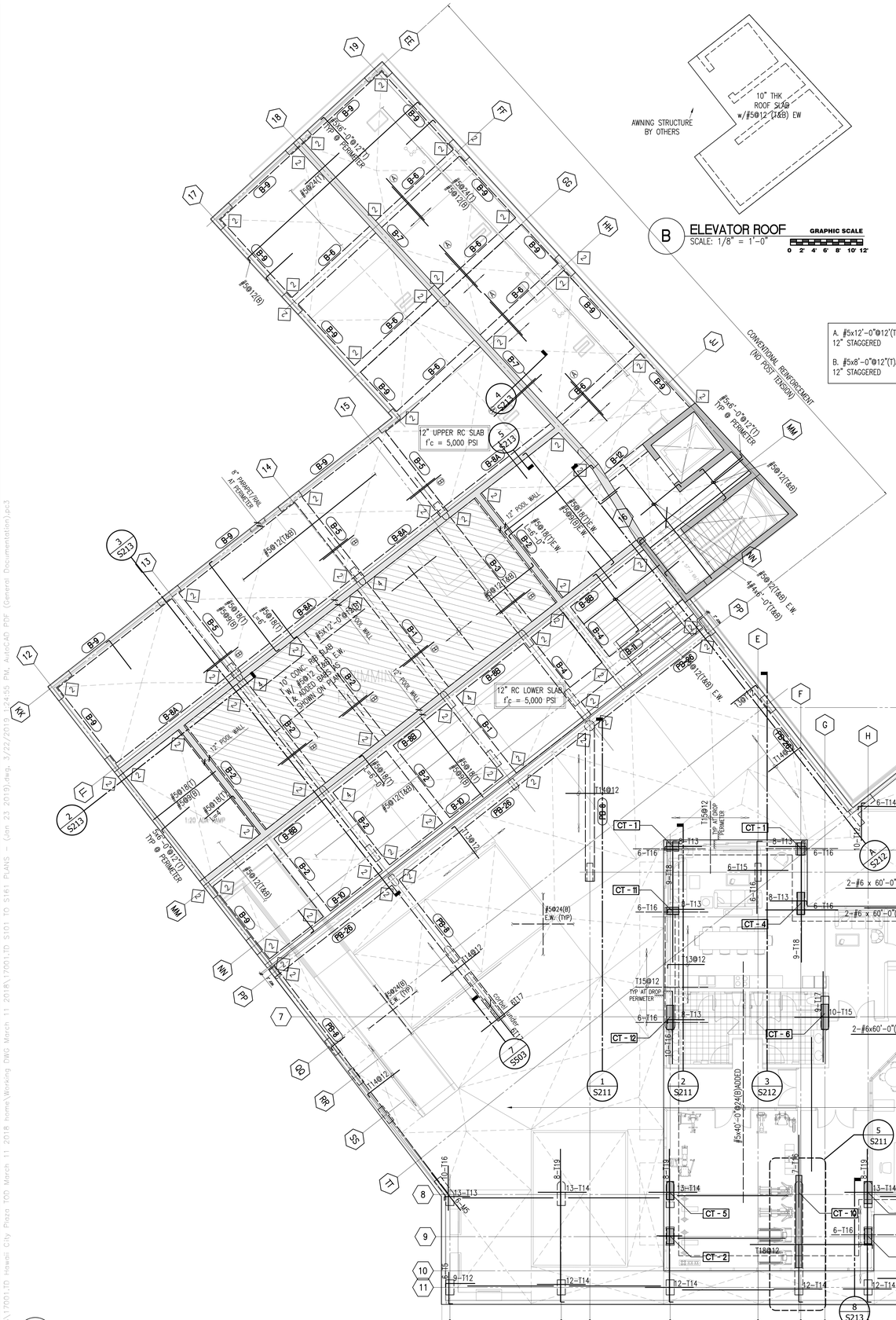

REINF. SCHEDULE		
TYPE	REINFORCING	REMARKS
T-1	#4 x 4'-0"	
T-2	#4 x 5'-0"	
T-3	#4 x 6'-0"	
T-4	#4 x 8'-0"	
T-5	#4 x 9'-0"	
T-6	#4 x 12'-0"	
T-7	#4 x 15'-0"	
T-8	#4 x 20'-0"	
T-9	#4 x 25'-0"	
T-10	#4 x 30'-0"	
T-11	#4 x 35'-0"	
T-12	#5 X 4'-0"	
T-13	#5 X 6'-0"	
T-14	#5 X 8'-0"	
T-15	#5 X 10'-0"	
T-16	#5 X 12'-0"	
T-17	#5 X 15'-0"	
T-18	#5 X 20'-0"	
T-19	#5 X 25'-0"	
T-20	#5 X 30'-0"	
T-21	#5 X 35'-0"	
T-22	#5 X 40'-0"	
M-1	#4 x 6'-0"	MID-DEPTH
M-2	#4 x 10'-0"	MID-DEPTH
M-3	#4 x 6'-0"	MID-DEPTH
M-4	#4 x 10'-0"	MID-DEPTH
M-5	#5 x 6'-0"	MID-DEPTH
M-6	#5 x 10'-0"	MID-DEPTH
M-7	#5 x 20'-0"	MID-DEPTH
M-8	#5 x 40'-0"	MID-DEPTH

SLAB REBAR NOTES:

1. #T2 INDICATES TOP BARS SEE SCHEDULE
   # INDICATES QUANTITY OF TYPE T2 BARS.
   #B2 INDICATES BOTTOM BARS, SEE SCHEDULE
   # INDICATES QUANTITY OF TYPE B2 BARS.
2. TYPICAL SLAB REINFORCING DETAILS ON SHEETS S700 AND S700 SHALL BE APPLIED TO ALL SLABS ONN THIS DRAWING.
3. SEE ACCOMPANYING POST TENSION LAYOUT DRAWINGS FOR OTHER INFO. NOT SHOWN.
4. SEE NOTES ON ACCOMPANYING POST TENSION LAYOUT DRAWINGS.
5. SEE 4/S402 FOR REINFORCING REQUIREMENTS AT SLAB PENETRATIONS. NOT ALL SLAB PENETRATIONS ARE SHOWN ON THIS PLAN. IT IS THE CONTRACTORS RESPONSIBILITY TO LOCATE AND IDENTIFY ALL SLAB PENETRATIONS AND OPENINGS.
6. PROVIDE 2-#4 E.W. ADDED @ EA. COLUMN

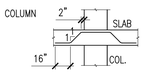

7. TYP. BOTT. SLAB REINF'T: #4@24(B) E.W.
   24" MIN. LAP SPLICE, U.N.O.
8. SHADED AREA REINF'T: #5@12(T) E.W.
   #5@6(B) E.W.
   HOOK TOP BARS ONLY
   STOP BOTT. REINF'T AT SLAB THICKNESS CHANGE.
9. SEE 4/S110 FOR ADDED REINF'T AT GLASS CURTAIN WALL ATTACHMENTS.
10. ⛤ INDICATES ADDED BARS PER DETAIL 18/S403
11. ———— INDICATES SECOND LAYER (BELOW TOP OR ABOVE BOTT LAYER)

AISE
ALLISON IDE
STRUCTURAL ENGINEERS LLC
900 Fort Street Mall Suite 1670
Honolulu, HI 96813-3717
808 536 2108
johnallison@allisonide.com

JOHN S. ALLISON
LICENSED PROFESSIONAL ENGINEER
No. 5933-S
HAWAII, U.S.A.
Signature
Expiration Date

This work was prepared by me or under my supervision. Construction of this project will be under my observation. Observation as defined in Section 16-115-2 of the Hawaii Administrative Rules 9-12-92 Title 16, Chapter 115, Professional Engineers, Architects, Surveyors, and Landscape Architects.

DEVELOPER:
CALIFORNIA INVESTMENT REGIONAL CENTER, LLC

PROJECT OWNER:
HAWAII CITY PLAZA, LP

Hawaii City Plaza
Honolulu, Hawaii
710 Sheridan Street
TMK 2-3-014: Parcels 002, 004, & 011

PERMIT SET

DATE 2019 MARCH 19
AISE JOB No 17001.TD

1	2018 11-16		

SHEET TITLE
LEVEL 6 (PODIUM) REBAR FRAMING PLAN

SHEET NO.
S142

2018 Hawaii City Plaza 700 Block 11 2018 Working Dwg March 11 2018 \17001.TD S101 FD S142 PLANS (Jan 23, 2019).dwg, 3/25/2019 10:45:55 PM, AutoCAD PDF (General Documentation).pc3

REINF. SCHEDULE		
TYPE	REINFORCING	REMARKS
T-1	#4 x 4'-0"	
T-2	#4 x 5'-0"	
T-3	#4 x 6'-0"	
T-4	#4 x 8'-0"	
T-5	#4 x 9'-0"	
T-6	#4 x 12'-0"	
T-7	#4 x 15'-0"	
T-8	#4 x 20'-0"	
T-9	#4 x 25'-0"	
T-10	#4 x 30'-0"	
T-11	#4 x 35'-0"	
M-1	#4 x 6'-0"	MID-DEPTH
M-2	#4 x 10'-0"	MID-DEPTH

SLAB REBAR NOTES:

1. #T2 INDICATES TOP BARS SEE SCHEDULE
   # INDICATES QUANTITY OF TYPE T2 BARS.
   #B2 INDICATES BOTTOM BARS, SEE SCHEDULE
   # INDICATES QUANTITY OF TYPE B2 BARS.
2. TYPICAL SLAB REINFORCING DETAILS ON SHEETS S700 AND S700 SHALL BE APPLIED TO ALL SLABS ONN THIS DRAWING.
3. SEE ACCOMPANYING POST TENSION LAYOUT DRAWINGS FOR OTHER INFO. NOT SHOWN.
4. SEE NOTES ON ACCOMPANYING POST TENSION LAYOUT DRAWINGS.
5. SEE 4/S402 FOR REINFORCING REQUIREMENTS AT SLAB PENETRATIONS. NOT ALL SLAB PENETRATIONS ARE SHOWN ON THIS PLAN. IT IS THE CONTRACTORS RESPONSIBILITY TO LOCATE AND IDENTIFY ALL SLAB PENETRATIONS AND OPENINGS.
6. PROVIDE 2-#4 E.W. ADDED @ EA. COLUMN

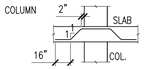

7. TYP. BOTT. SLAB REINF'T: #4@24(B) E.W.
   24" MIN. LAP SPLICE, U.N.O.
8. SHADED AREA REINF'T: #5@12(T) E.W.
   #5@6(B) E.W.
   HOOK TOP BARS ONLY
   STOP BOTT. REINF'T AT SLAB THICKNESS CHANGE.
9. SEE 4/S110 FOR ADDED REINF'T AT GLASS CURTAIN WALL ATTACHMENTS.
10. ⊛ INDICATES ADDED BARS PER DETAIL 18/S403

B TOWER (TYP) REBAR FRAMING PLAN

SCALE: 1/8" = 1'-0"

GRAPHIC SCALE 0 2' 4' 6' 8' 10' 12'

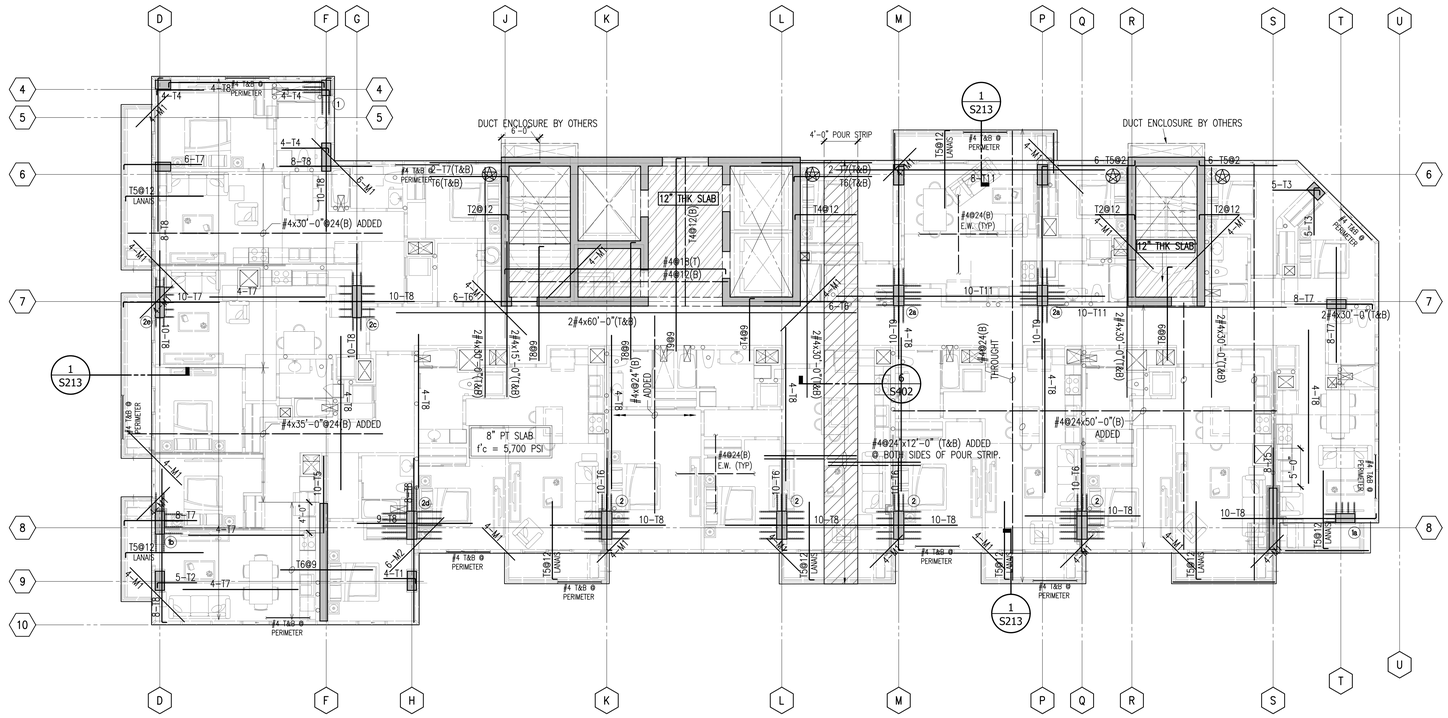

PT NOTES:

1. SEE GENERAL NOTES ON S001
2. SEE ARCHITECTURAL, MECHANICAL, ELECTRICAL, ETC. DRAWINGS FOR ALL DIMENSIONS, SLAB DEPRESSIONS, SLAB EDGE LOCATION, RAISED CURBS AND ISLANDS, CONCRETE PADS, DRAINS, ETC.
3. SEE ARCHITECTURAL DRAWINGS FOR ALL REVEALS, CHAMFERS, FINISHES, ETC. FOR ALL CONCRETE ELEMENTS. VERIFY ALL DIMENSIONS AND ELEVATIONS OF STRUCTURAL ELEMENTS WITH ARCHITECTURAL DRAWINGS.
4. SEE POST TENSION SLAB NOTES AND DETAILS ON S401 SERIES DRAWINGS.
5. SEE TYPICAL DETAILS ON S400 SERIES DRAWINGS.
6. SEE FOUNDATION PLAN AND SCHEDULES FOR CONCRETE COLUMN AND WALL TYPES AND SIZES.
7. SEE S403, S404 FOR CONCRETE BEAM SCHEDULE AND DETAILS.
8. SEE ACCOMPANYING SLAB REBAR DRAWINGS FOR OTHER INFO. NOT SHOWN.
9. TYPICAL C.G.S. FOR PT TENDON IN SLABS OR BEAMS (UNO)

   SLABS
   A. AT SUPPORTS : 1 ½" BELOW TOP OF SLAB
   B. AT MIDSPAN : 1 ½" ABOVE BOTTOM OF SLAB
   C. AT SLAB EDGE : MID DEPTH OF SLAB

   BEAMS
   A. AT SUPPORTS : 2 ½" BELOW TOP OF SLAB
   B. AT MID SPAN : 2 ½" ABOVE BOTTOM SLAB
   C. AT BEAM EDGE : MID-DEPTH OF BEAM

10. SEE PLAN REBAR LAYOUT ON ACCOMPANYING REBAR PLANS
11. Use f'c= 5700 PSI CONCRETE AT ALL SUSPENDED FLOOR.
12. ⟩ INDICATES #4x 24" HAIRPIN SEE 11/S402.
13. PRE-ENGINEER STAIR MANUFACTURER SHALL PROVIDE ALL NECESSARY CONNECTIONS AND EMBEDS TO SUPPORT STAIRS, LANDINGS AND SUPPORT FRAME(S). USE CAST IN PLACE EMBEDS ONLY, NO DRILLED INSERTS SHALL BE ALLOWED. PROVIDE SHOP DRAWINGS FOR ENGINEERS REVIEW PRIOR TO FABRICATION.

A TOWER (TYP) P.T. FRAMING PLAN

SCALE: 1/8" = 1'-0"

GRAPHIC SCALE 0 2' 4' 6' 8' 10' 12'

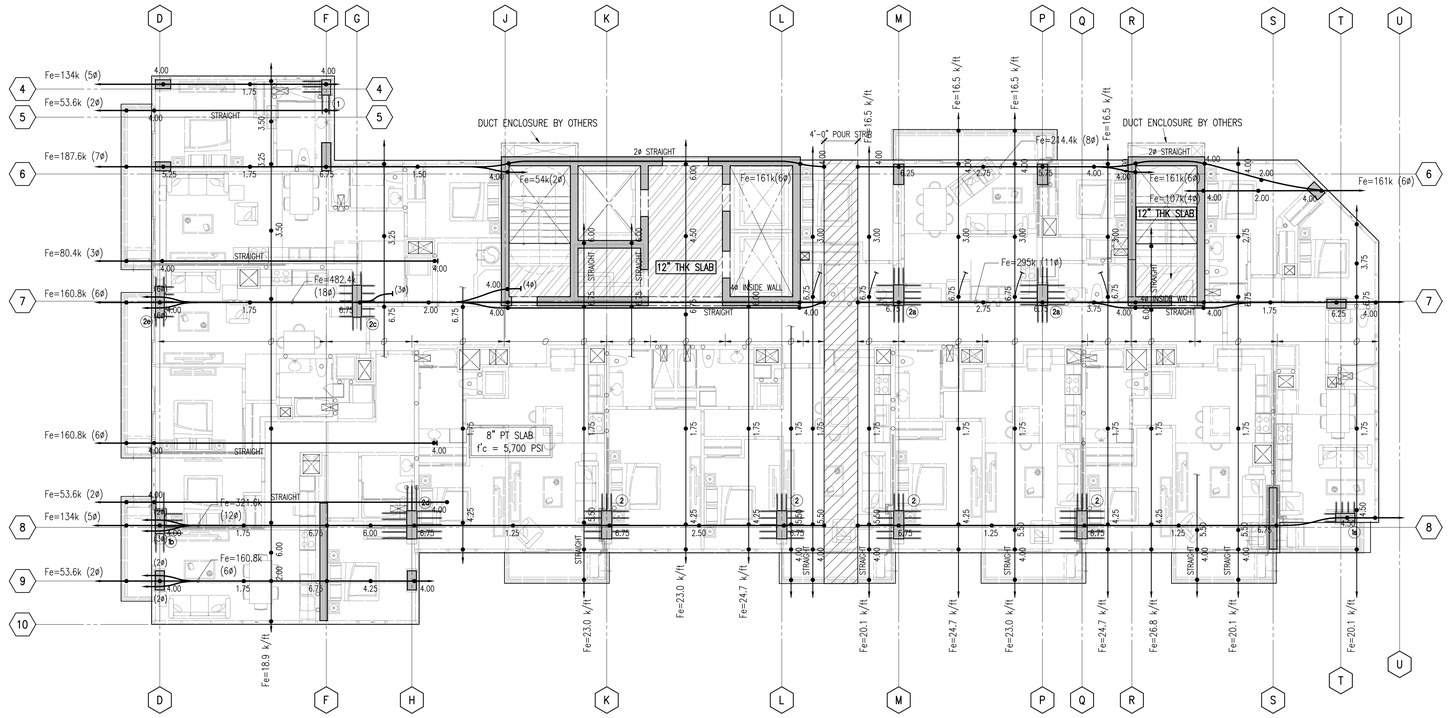

ALLISON IDE
STRUCTURAL ENGINEERS LLC
900 Fort Street Mall Suite 1670
Honolulu, HI 96813-3717
808 536 2108
johnallison@allisonide.com

JOHN S. ALLISON LICENSED PROFESSIONAL ENGINEER No. 5933 S HAWAII, U.S.A.

Signature
Expiration Date:

This work was prepared by me or under my supervision. Construction of this project will be under my observation. Observation as defined in Hawaii Revised Statutes and Administrative Rules 9-12-02 Title 16, Chapter 115, Professional Engineers, Architects, Surveyors, and Landscape Architects.

DEVELOPER:
CALIFORNIA INVESTMENT REGIONAL CENTER, LLC

PROJECT OWNER:
HAWAII CITY PLAZA, LP

Hawaii City Plaza
Honolulu, Hawaii
710 Sheridan Street
TMK 2-3-014: Parcels 002, 004, & 011

PERMIT SET

DATE 2019 MARCH 19
AISE JOB No 17001.TD

1	2019 11-16	

SHEET TITLE

TOWER (TYP.) P.T. AND REBAR FRAMING PLANS

SHEET NO.

S151

2017 JOBS\17001.TD Hawaii City Plaza 700 March 19 2019 Items\Working DWG March 19 2019\17001.TD S151 TO S161 PLANS - (Jan 23, 2019).dwg, 3/22/2019 1:25:00 PM, AutoCAD PDF (General Documentation).pc3

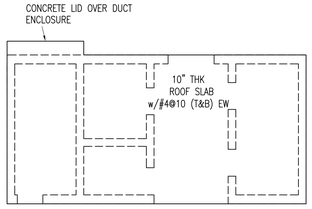

C ELEVATOR ROOF
SCALE: 1/8" = 1'-0"
GRAPHIC SCALE 0 2' 4' 6' 8' 10' 12'

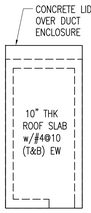

D STAIR ROOF
SCALE: 1/8" = 1'-0"
GRAPHIC SCALE 0 2' 4' 6' 8' 10' 12'

SEE REINFORCEMENT AND PT NOTES SHEET S151

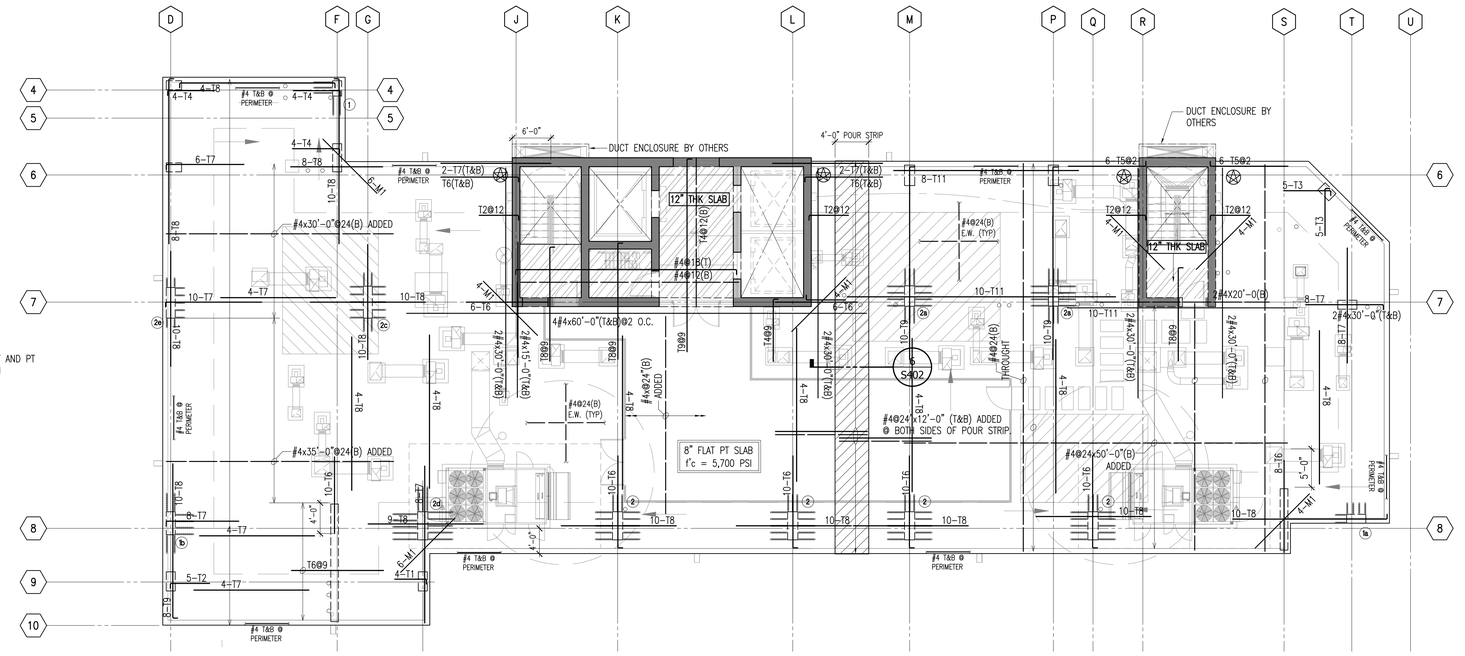

B ROOF REBAR FRAMING PLAN
SCALE: 1/8" = 1'-0"
GRAPHIC SCALE 0 2' 4' 6' 8' 10' 12'

SEE REINFORCEMENT AND PT NOTES SHEET S151

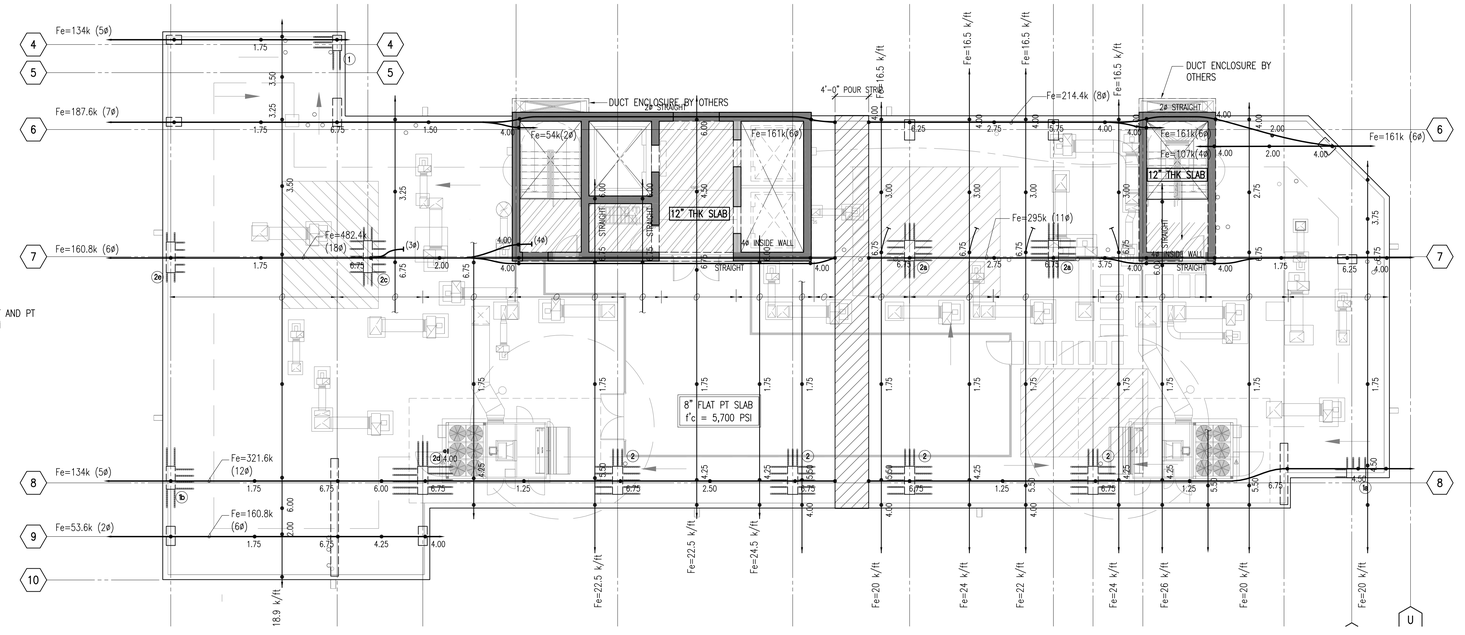

A ROOF P.T. FRAMING PLAN
SCALE: 1/8" = 1'-0"
GRAPHIC SCALE 0 2' 4' 6' 8' 10' 12'

ALLISON IDE
STRUCTURAL ENGINEERS LLC
900 Fort Street Mall Suite 1670
Honolulu, HI 96813-3717
808 536-2108
johnallison@allisonide.com

JOHN S. ALLISON
LICENSED PROFESSIONAL ENGINEER
No. 5933 S
HAWAII, U.S.A.
Signature
Expiration Date

This work was prepared by me or under my supervision. Construction of this project will be under my observation. Observation as defined in Section 16-115-2 of the Hawaii Administrative Rules, 9-12-02 Title 16, Chapter 115, Professional Engineers, Architects, Surveyors, and Landscape Architects.

DEVELOPER:
CALIFORNIA INVESTMENT REGIONAL CENTER, LLC

PROJECT OWNER:
HAWAII CITY PLAZA, LP

Hawaii City Plaza
Honolulu, Hawaii
710 Sheridan Street
TMK 2-3-014: Parcels 002, 004, & 011

PERMIT SET

DATE 2019 MARCH 19
AISE JOB No 17001.TD

1	2018 11-16	

SHEET TITLE
ROOF P.T., REBAR AND ELEVATOR FRAMING PLANS

SHEET NO.
S161

P:\2017 JOBS\17001.TD Hawaii City Plaza TOD March 11 2018 Home\Working DWG March 11 2018\17001.TD S101 TO S161 PLANS - (Jan 23 2019).dwg, 3/22/2019 5:06:59 PM, Adobe PDF

TYPICAL CIP WALL NOTES:

1. SEE S004 FOR TYPICAL WALL DETAILS.
2. SEE S101 FOR GENERAL NOTES AND S003 FOR GENERAL REBAR DETAILS.
3. F'c FOR CIP WALLS: SEE WALL SCHEDULE ON S701.
4. WALL CONSTRUCTION JOINTS (CJ'S): CJ'S SHALL 4/S004 OR ROUGHENED SURFACE CJ'S AS DEFINED IN CONSTRUCTION JOINT NOTES ON S101.
5. CONTRACTOR SHALL VERIFY ALL DIMENSIONS FOR WALL OPENINGS AND LENGTH, HEIGHT, ETC. WITH ARCHITECTURAL AND ELEVATOR SHOP DRAWINGS.

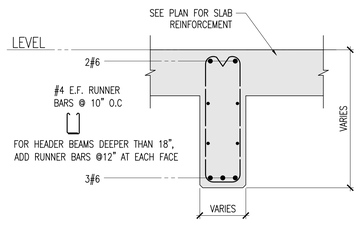

3A HEADER DETAIL
SCALE : 3/4" = 1'-0"
GRAPHIC SCALE 0 6" 1' 2'

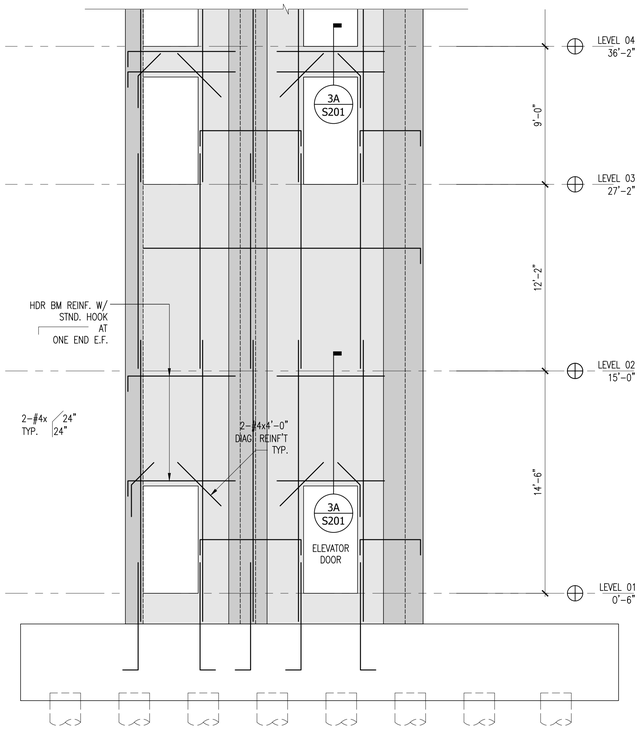

3 TYPICAL WALL ELEVATION
SCALE : 1/4" = 1'-0"
GRAPHIC SCALE 0 1' 2' 3' 4' 5' 6'

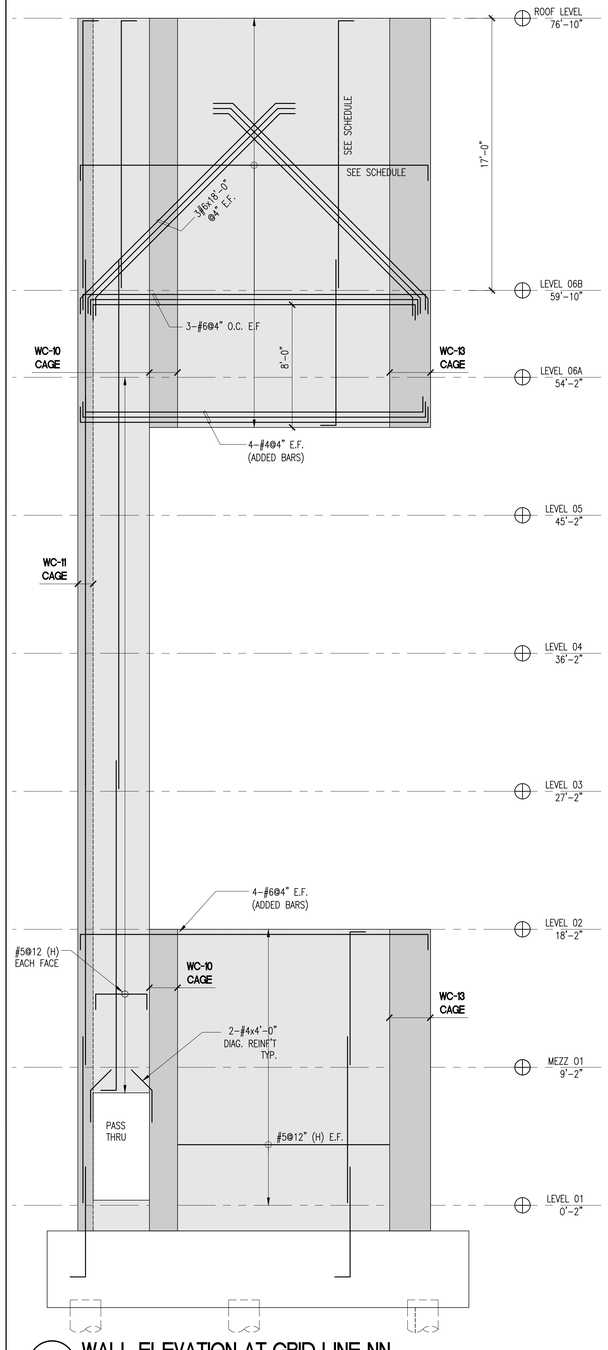

2 WALL ELEVATION AT GRID LINE NN
SCALE : 1/4" = 1'-0"
GRAPHIC SCALE 0 1' 2' 3' 4' 5' 6'

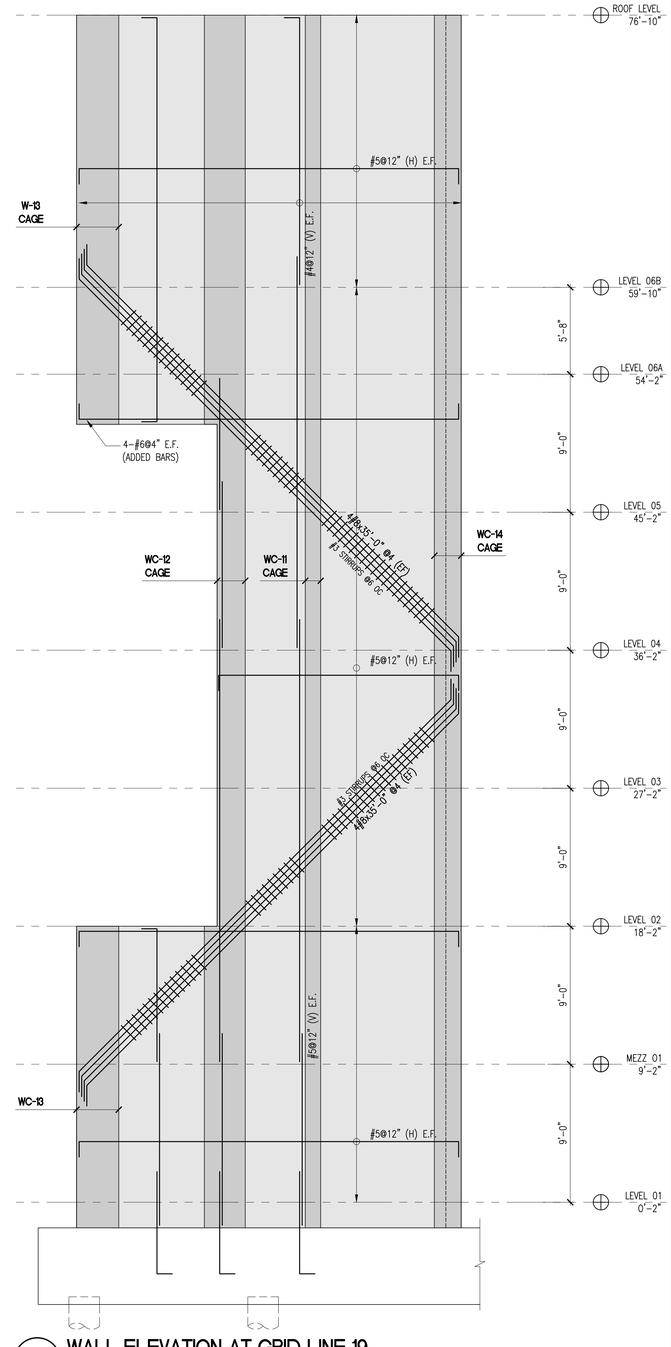

1 WALL ELEVATION AT GRID LINE 19
SCALE : 1/4" = 1'-0"
GRAPHIC SCALE 0 1' 2' 3' 4' 5' 6'

AISE
ALLISON IDE
STRUCTURAL ENGINEERS LLC
900 Fort Street Mall Suite 1670
Honolulu, HI 96813-3717
808 536 2108
johnallison@allisonide.com

JOHN S. ALLISON
LICENSED PROFESSIONAL ENGINEER
No. 5933-S
HAWAII, U.S.A.
Signature
Expiration Date

This work was prepared by me or under my supervision. Construction of this project will be under my observation. Observation as defined in Section 16-115-2 of Hawaii Administrative Rules 9-12-02 Title 16, Chapter 115, Professional Engineers, Architects, Surveyors, and Landscape Architects.

DEVELOPER:
CALIFORNIA INVESTMENT REGIONAL CENTER, LLC

PROJECT OWNER:
HAWAII CITY PLAZA, LP

Hawaii City Plaza
Honolulu, Hawaii
710 Sheridan Street
TMK 2-3-014: Parcels 002, 004, & 011

PERMIT SET

DATE 2019 MARCH 19
AISE JOB No 17001.TD

1 2018 11-16

SHEET TITLE
WALL ELEVATIONS

SHEET NO.
S201

\2017 JOBS\17001.TD Hawaii City Plaza TOD March 11 2018 home\Working DWG March 11 2018\17001.TD S201 WALL ELEVATION.dwg, 3/22/2019 1:25:12 PM, AutoCAD PDF (General Documentation).pc3

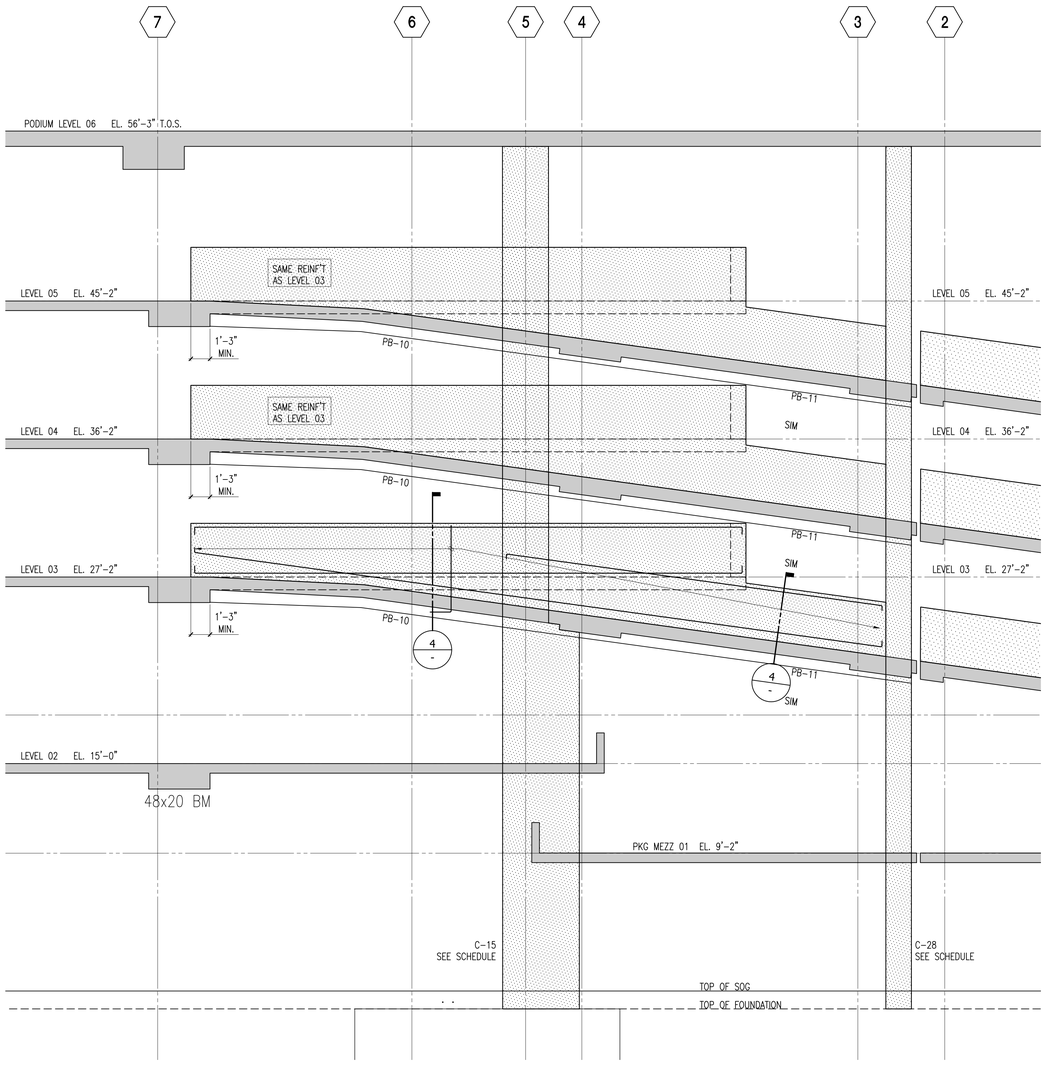

1 RAMP SECTION
SCALE: 1/4" = 1'-0"
GRAPHIC SCALE 0 1' 2' 3' 4' 5' 6'

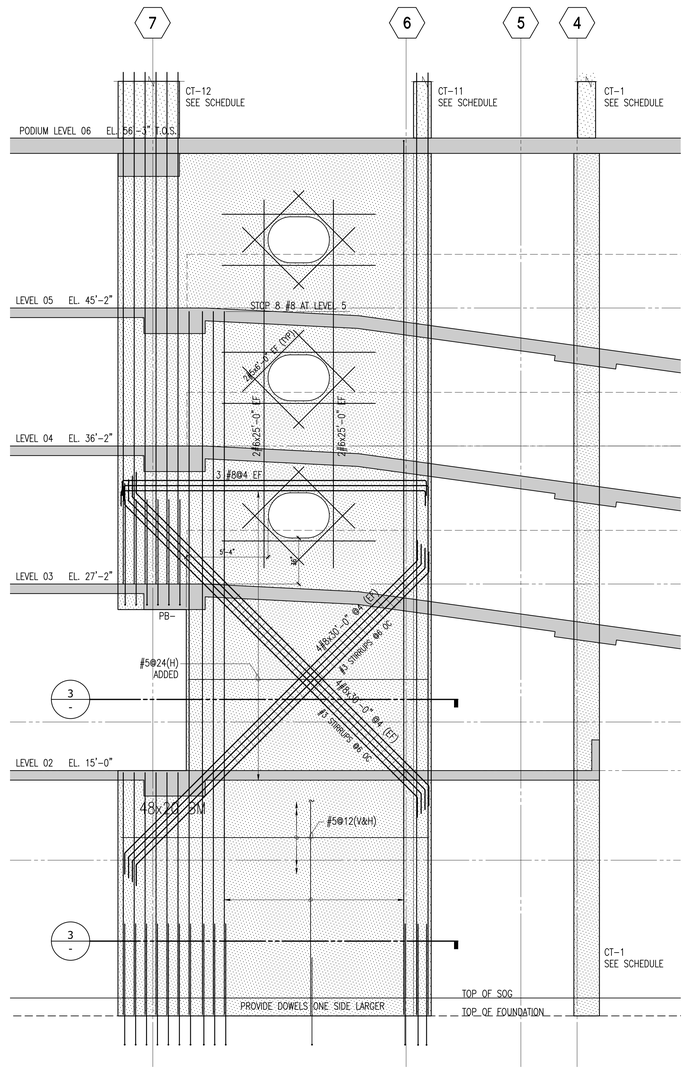

2 INTERIOR RAMP WALL ELEVATION
SCALE: 1/4" = 1'-0"
GRAPHIC SCALE 0 1' 2' 3' 4' 5' 6'

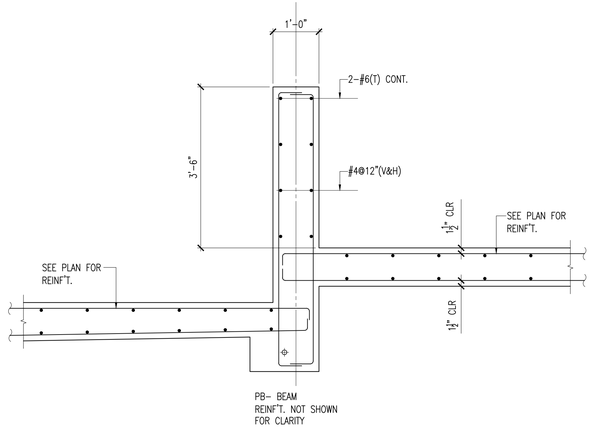

4 SECTION AT RAMP
SCALE: 3/4" = 1'-0"
GRAPHIC SCALE 0 6" 1' 2'

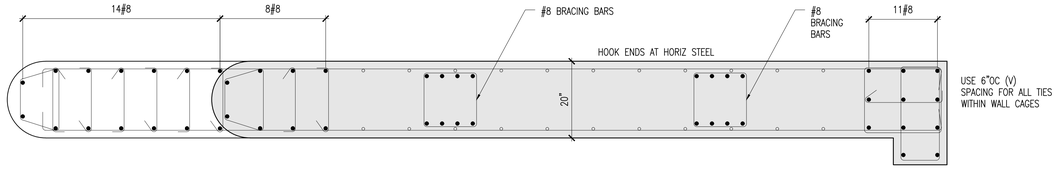

3 WALL REINFORCING STEEL
SCALE: 3/4" = 1'-0"
GRAPHIC SCALE 0 6" 1' 2'

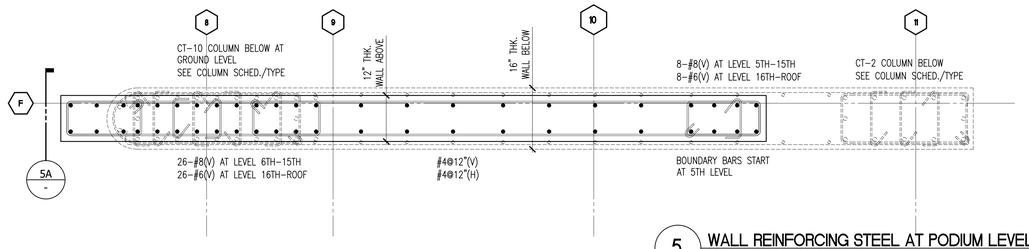

5 WALL REINFORCING STEEL AT PODIUM LEVEL
SCALE: 3/4" = 1'-0"
GRAPHIC SCALE 0 6" 1' 2'

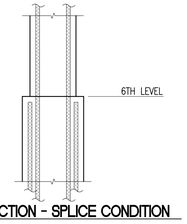

5A SECTION - SPLICE CONDITION

AISE
ALLISON IDE
STRUCTURAL ENGINEERS LLC
900 Fort Street Mall Suite 1670
Honolulu, HI 96813-3717
808 536 2108
johnallison@allisonide.com

JOHN S. ALLISON
LICENSED PROFESSIONAL ENGINEER
No. 5933-S
HAWAII, U.S.A.
Signature
Expiration Date:

This work was prepared by me or under my supervision. Construction of this project will be under my observation. Observation as defined in Section 16-115-2 of Hawaii Administrative Rules 9-12-02 Title 16, Chapter 115, Professional Engineers, Architects, Surveyors, and Landscape Architects.

DEVELOPER:
CALIFORNIA INVESTMENT REGIONAL CENTER, LLC

PROJECT OWNER:
HAWAII CITY PLAZA, LP

Hawaii City Plaza
Honolulu, Hawaii
710 Sheridan Street
TMK 2-3-014: Parcels 002, 004, & 011

PERMIT SET

DATE 2019 MARCH 19
AISE JOB No 17001.TD

1	2018 11-16

SHEET TITLE
BUILDING SECTIONS

SHEET NO.
S211

\2017 JOBS\17001.TD Hawaii City Plaza TOD March 11 2018 home\Working DWG March 11 2018\17001.TD S211 S212 Bldg Sect C-35 removed Oct 30 2018.dwg, 3/22/2019 1:25:22 PM, AutoCAD PDF (General Documentation).pc3

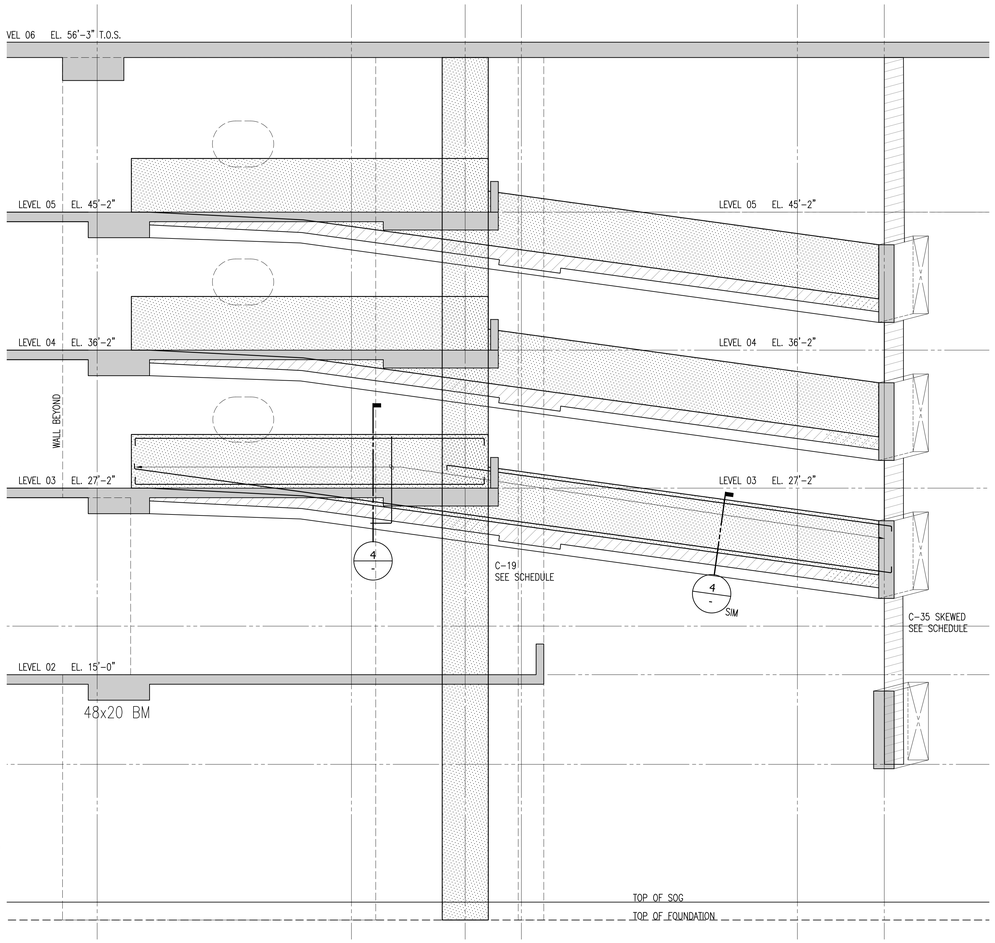

3 RAMP SECTION
SCALE: 1/4" = 1'-0"
GRAPHIC SCALE 0 1' 2' 3' 4' 5' 6'

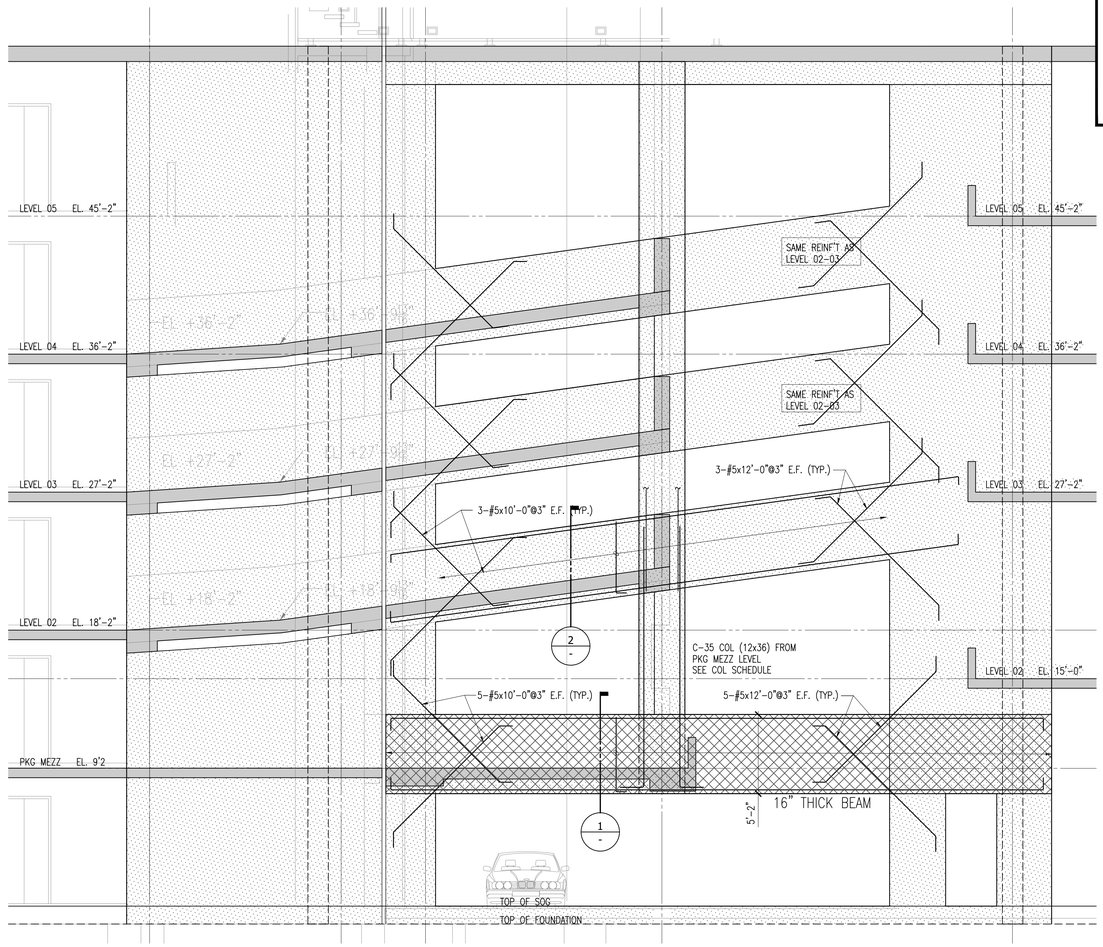

A END RAMP ELEVATION
SCALE: 1/4" = 1'-0"
GRAPHIC SCALE 0 1' 2' 3' 4' 5' 6'

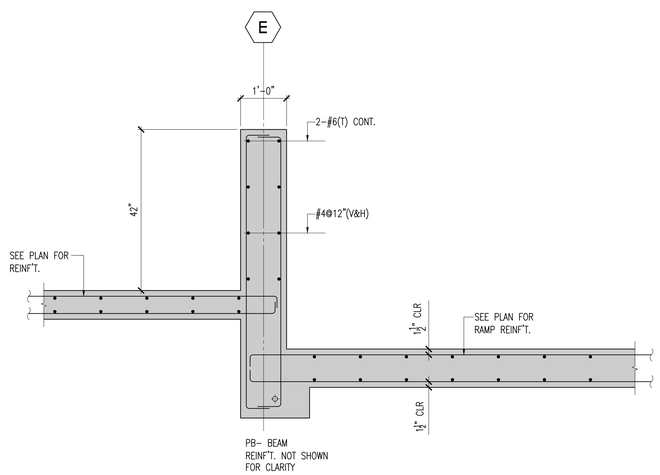

4 SECTION AT RAMP
SCALE: 3/4" = 1'-0"
GRAPHIC SCALE 0 6" 1' 2'

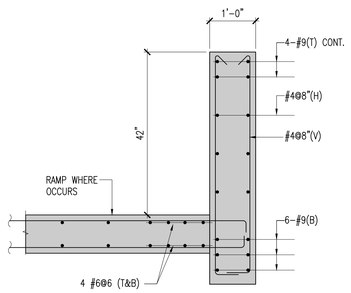

2 SECTION AT RAMP
SCALE: 3/4" = 1'-0"
GRAPHIC SCALE 0 6" 1' 2'

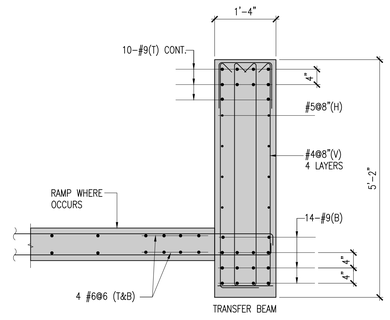

1 SECTION AT RAMP
SCALE: 3/4" = 1'-0"
GRAPHIC SCALE 0 6" 1' 2'

AISE
ALLISON IDE
STRUCTURAL ENGINEERS LLC
900 Fort Street Mall Suite 1670
Honolulu, HI 96813-3717
808 536.2108
johnallison@allisonide.com

JOHN S. ALLISON
LICENSED PROFESSIONAL ENGINEER
No. 5933-S
HAWAII, U.S.A.
Signature
Expiration Date:

This work was prepared by me or under my supervision. Construction of this project will be under my observation. Observation as defined in Section 16-115-2 of Hawaii Administrative Rules 9-12-02 Title 16, Chapter 115, Professional Engineers, Architects, Surveyors, and Landscape Architects.

DEVELOPER:
CALIFORNIA INVESTMENT REGIONAL CENTER, LLC

PROJECT OWNER:
HAWAII CITY PLAZA, LP

Hawaii City Plaza
Honolulu, Hawaii
710 Sheridan Street
TMK 2-3-014: Parcels 002, 004, & 011

PERMIT SET

DATE 2019 MARCH 19
AISE JOB No 17001.TD

1	2018 11-16

SHEET TITLE
BUILDING SECTIONS

SHEET NO.
S212

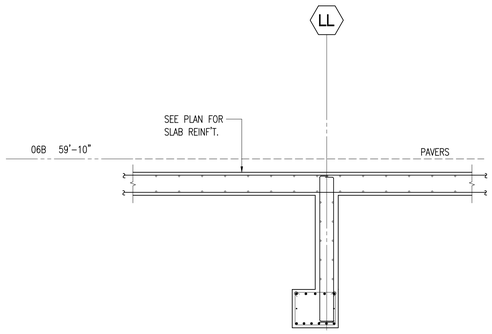

5 SECTION AT POOL DECK
SCALE: 3/8" = 1'-0"
GRAPHIC SCALE 0 6" 1' 2' 3' 4'

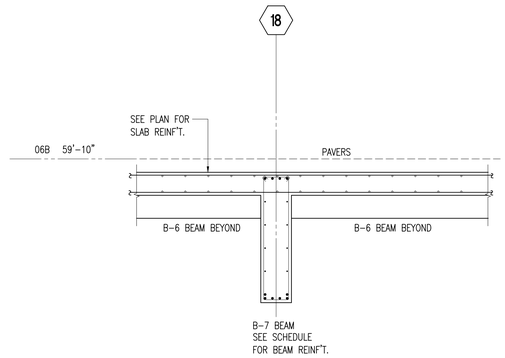

4 SECTION AT POOL DECK
SCALE: 3/8" = 1'-0"
GRAPHIC SCALE 0 6" 1' 2' 3' 4'

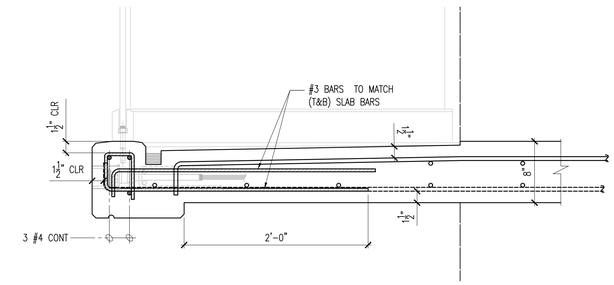

1 TYPICAL LANAI SECTION
SCALE: 1 1/2" = 1'-0"
GRAPHIC SCALE 0 2" 4" 6" 8" 10" 1'

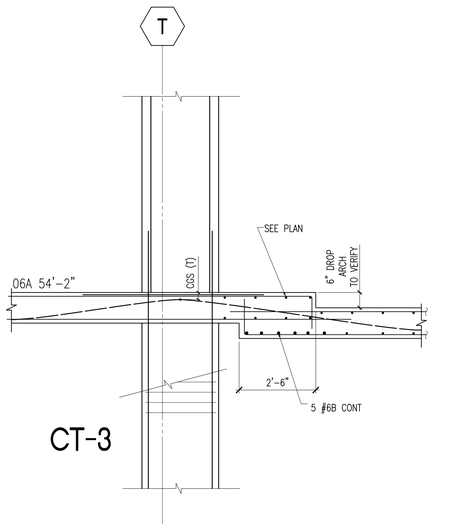

6 SECTION AT PODIUM DECK
SCALE: 1/2" = 1'-0"
GRAPHIC SCALE 0 6" 1' 2' 3' 4'

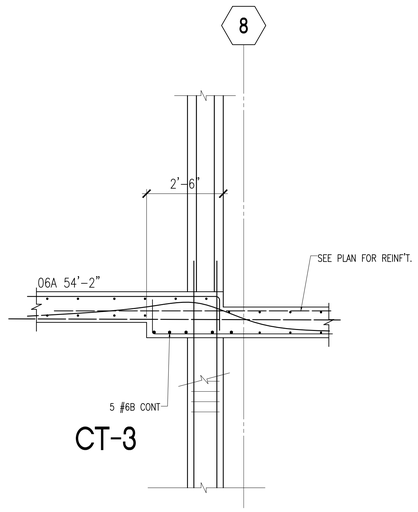

7 SECTION AT PODIUM DECK
SCALE: 1/2" = 1'-0"

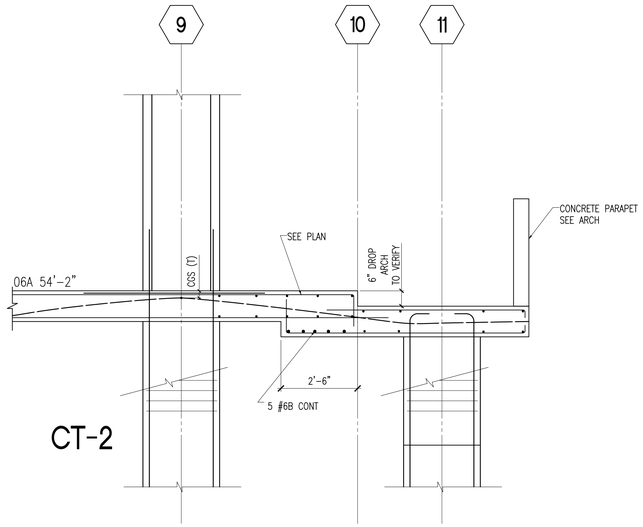

8 SECTION AT PODIUM DECK
SCALE: 1/2" = 1'-0"
GRAPHIC SCALE 0 6" 1' 2' 3' 4'

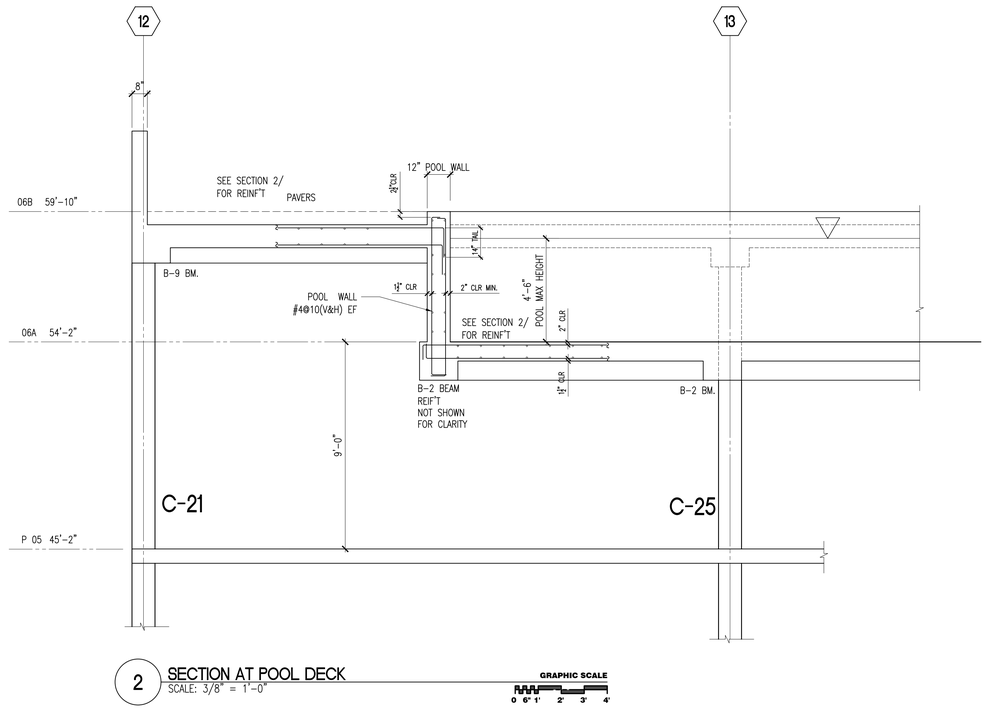

2 SECTION AT POOL DECK
SCALE: 3/8" = 1'-0"
GRAPHIC SCALE 0 6" 1' 2' 3' 4'

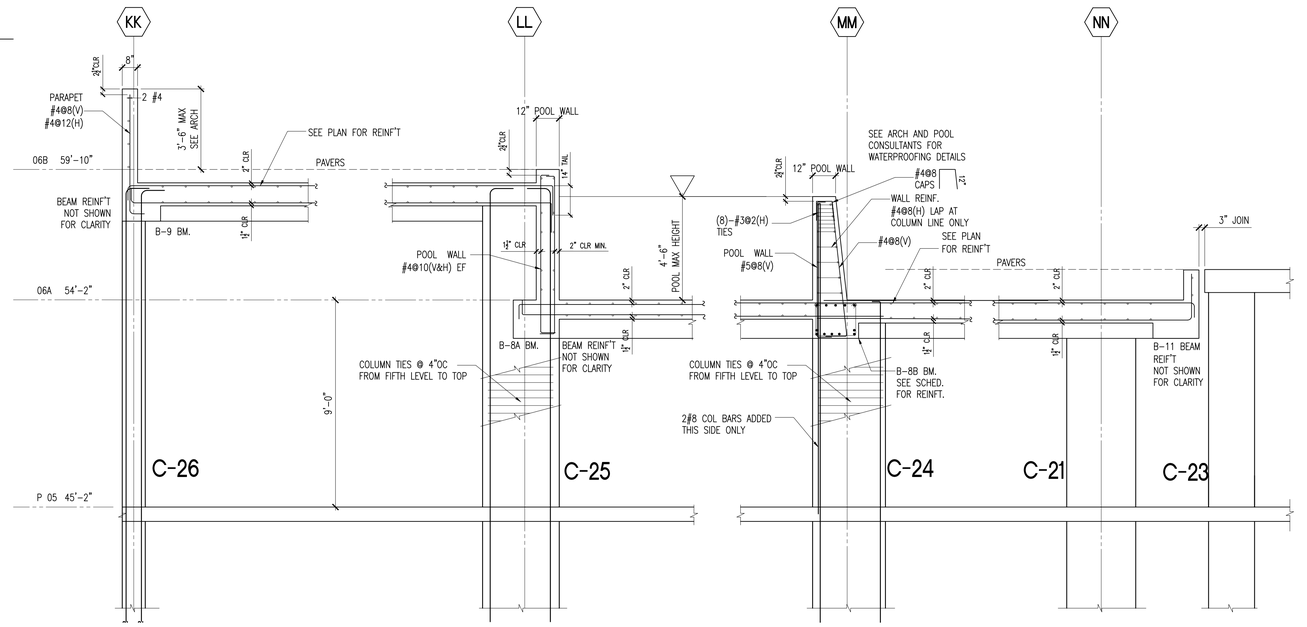

3 SECTION AT POOL DECK
SCALE: 3/8" = 1'-0"
GRAPHIC SCALE 0 6" 1' 2' 3' 4'

ALLISON IDE
STRUCTURAL ENGINEERS LLC
900 Fort Street Mall Suite 1670
Honolulu, HI 96813-3717
808 536 2108
johnallison@allisonide.com

JOHN S. ALLISON
LICENSED PROFESSIONAL ENGINEER
No. 5933-S
HAWAII, U.S.A.
Signature
Expiration Date:

This work was prepared by me or under my supervision. Construction of this project will be under my observation. Observation as defined in Section 16-115-2, Hawaii Administrative Rules 9-12-02 Title 16, Chapter 115, Professional Engineers, Architects, Surveyors, and Landscape Architects.

DEVELOPER:
CALIFORNIA INVESTMENT
REGIONAL CENTER, LLC

PROJECT OWNER:
HAWAII CITY PLAZA, LP

Hawaii City Plaza
Honolulu, Hawaii

710 Sheridan Street
TMK 2-3-014: Parcels 002, 004, & 011

PERMIT
SET

DATE 2019 MARCH 19
AISE JOB No 17001.TD

1	2018 11-16	

SHEET TITLE

BUILDING
SECTIONS

SHEET NO.

S213

X:\2017 JOBS\17001.10 Hawaii City Plaza\100 Working Drawings\DWG Working Files\17001.10 S213 Bldg Sect A-A Oct 1 2018.dwg, 11/22/2019 12:53:38 PM, AutoCAD PDF (General Documentation).pc3

NOTES:

1. IF #9 LONGITUDINAL PILE BARS ARE NOT STIFF ENOUGH TO PENETRATE GROUT, INSTALL #10 OR #11 BARS.
2. PROVIDE ALL CENTRALIZERS AND SPACERS TO HOLD REINF'T CAGE IN PLACE TO MAINTAIN PROPER POSITIONING OF BARS AND NECESSARY CLEAR COVER.
3. CONTRACTOR SHALL REFER TO GEOTECHNICAL REPORT FOR ALL INFORMATION. IF THERE IS CONFLICTING INFORMATION BETWEEN THE GEOTECHNICAL REPORT AND THE STRUCTURAL DRAWINGS, THE CONTRACTOR SHALL FOLLOW THE GEOTECHNICAL REPORT.
4. CONSULT SOILS ENGINEER FOR BACKFILL AND COMPACTION REQUIREMENTS.

ALLOWABLE LATERAL SEE GEOTECHNICAL REPORT

PILE DESIGN CAPACITY
REFER TO GEOTHECNICAL REPORT

24"ø AUGERED CAST IN PLACE PILE

PILE CAGE 8-#9(V) GRADE 60

3" CLR TYP

#4 TIES, ALTERNATE HOOKS AS SHOWN

1A SECTION

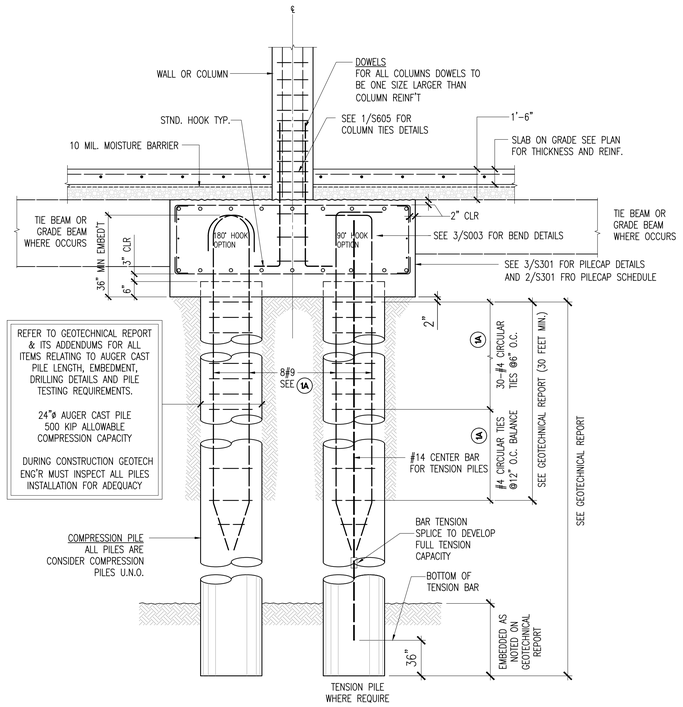

1 TYPICAL AUGERCAST PILE / PILECAP DETAIL
NOTE TO SCALE

PILECAP SCHEDULE

SEE PILE CAPS FOR SIZES

PILECAP TYPE	NUMBER OF PILES	DEPTH (in)	LONG BARS REINF. TOP	LONG BARS REINF. BOTTOM	SHORT BARS REINF. TOP	SHORT BARS REINF. BOTTOM	REMARKS (ADDITIONAL) LONG BARS REINF. TOP	LONG BARS REINF. BOTTOM	SHORT BARS REINF. TOP	SHORT BARS REINF. BOTTOM
PC-1	1	48	6-#6	6-#6	6#6	6-#6				
PC-2	2	48	6#7@12"	6#7@12"	10#7@12"	10#7@12"				
PC-2A	2	48	8#7@10"	8#7@10"	10#7@12"	10#7@12"				
PC-2B	2	48	7#7@12"	7#7@12"	10#7@12"	10#7@12"				
PC-2C	2	48	7#7@12"	7#7@12"	10#7@12"	10#7@12"				
PC-2F	2	48	7#7@12"	7#7@12"	10#7@12"	10#7@12"				
PC-2H	2	48	8#7@10"	8#7@10"	10#7@12"	10#7@12"				
PC-2J	2	48	6#7@12"	6#7@12"	10#7@12"	10#7@12"				
PC-3	3	48	10#7@12"	10#7@12"	11#7@12"	11#7@12"				
PC-3A	3	48	11#7@10"	11#7@10"	10#7@12"	10#7@12"				
PC-3C	3	48	SEE PILECAP SECTION							
PC-3D	3	48	SEE PILECAP SECTION							
PC-3E	3	48	SEE PILECAP SECTION							
PC-3F	3	48	SEE PILECAP SECTION							
PC-4	4	54	12#8@9"	12#8@9"	12#8@9"	12#8@9"				
PC-4A	4	54	12#8@9"	12#8@9"	12#8@9"	12#8@9"				
PC-4B	4	54	10#8@12"	10#8@12"	12#8@12"	12#8@12"				
PC-5A	5	54	SEE PILECAP SECTION							
PC-5B	5	54	10#8@12"	10#8@12"	20#8@12"	20#8@12"				
PC-6	6	54	11#8@10"	11#8@10"	15#8@12"	15#8@12"				
PC-6A	6	54	SEE PILECAP SECTION							
PC-6B	6	54	SEE PILECAP SECTION							
PC-7	7	54	12#8@9"	12#8@9"	25#8@12"	25#8@12"				
PC-7B	7	54	SEE PILECAP SECTION							
PC-11	11	54	15#8@9"	12#8@9"	25#8@12"	25#8@12"				
PC-13	13	60	12#9@9"	12#9@9"	38#9@12"	38#9@12"				

NOTE: FOR PILECAP DIMENSIONS SEE S302 AND S303

2 PILECAP SCHEDULE
NOTE TO SCALE

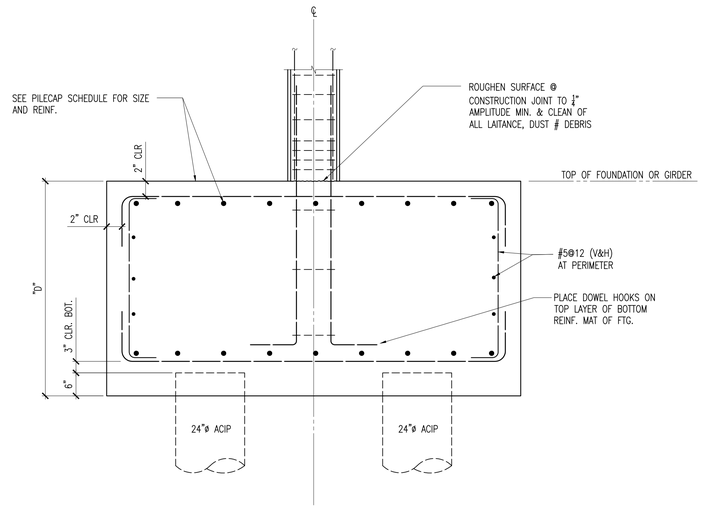

3 TYPICAL PILECAP SECTION
SCALE : 3/8" = 1'-0"
GRAPHIC SCALE 0 6" 1' 2' 3' 4'

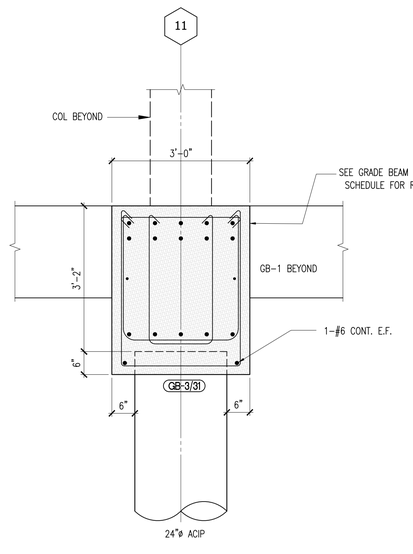

4A SECTION

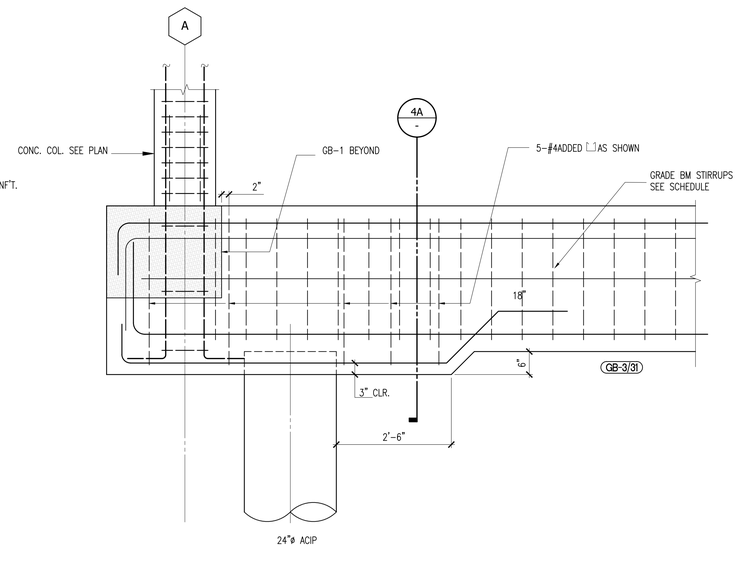

4B ELEVATION

4 GRADE BEAM SECT at PILE
SCALE : 3/8" = 1'-0"
GRAPHIC SCALE 0 6" 1' 2' 3' 4'

ALLISON IDE
STRUCTURAL ENGINEERS LLC
900 Fort Street Mall Suite 1670
Honolulu, HI 96813-3717
808 536 2108
johnallison@allisonide.com

JOHN S. ALLISON LICENSED PROFESSIONAL ENGINEER No. 5933 S HAWAII, U.S.A.
Signature
Expiration Date

This work was prepared by me or under my supervision. Construction of this project will be under my observation. Observation as defined in Section 16-115-2 of the Hawaii Administrative Rules 9-12-02 Title 16, Chapter 115, Professional Engineers, Architects, Surveyors, and Landscape Architects.

DEVELOPER:
CALIFORNIA INVESTMENT REGIONAL CENTER, LLC

PROJECT OWNER:
HAWAII CITY PLAZA, LP

Hawaii City Plaza
Honolulu, Hawaii
710 Sheridan Street
TMK 2-3-014: Parcels 002, 004, & 011

PERMIT SET

DATE 2019 MARCH 19
AISE JOB No 17001.TD

1	2018 11-16	

SHEET TITLE
PILE - PILE CAP SCHEDULE AND DETAILS

SHEET NO.
S301

\2017 JOBS\17001.TD Hawaii City Plaza TCD March 11, 2018 Items Missing FWG March 11, 2018\17001.TD S301 - S305 306 Pile Pilecap Stairs and MAT FND.dwg, 3/22/2019 7:54:48 AM, AutoCAD PDF (General Documentation).pc3

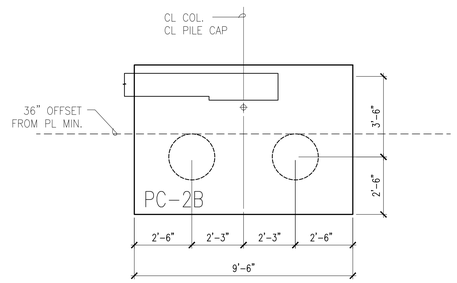

4 PILE CAP TYPE (PC-2B)
SCALE : 3/8" = 1'-0"
GRAPHIC SCALE 0 6" 1' 2' 3' 4'

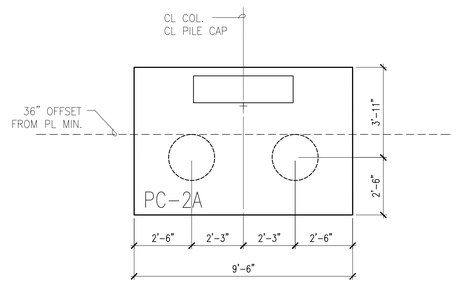

3 PILE CAP TYPE (PC-2A)
SCALE : 3/8" = 1'-0"
GRAPHIC SCALE 0 6" 1' 2' 3' 4'

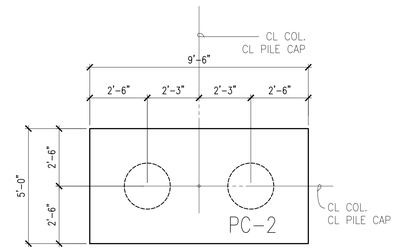

2 PILE CAP TYPE (PC-2)
SCALE : 3/8" = 1'-0"
GRAPHIC SCALE 0 6" 1' 2' 3' 4'

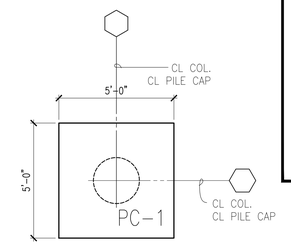

1 PILE CAP TYPE (PC-1)
SCALE : 3/8" = 1'-0"
GRAPHIC SCALE 0 6" 1' 2' 3' 4'

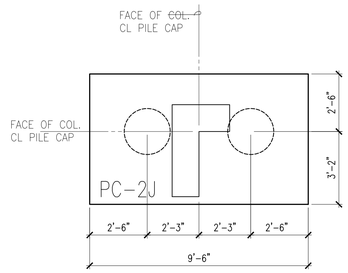

8 PILE CAP TYPE (PC-2J)
SCALE : 3/8" = 1'-0"
GRAPHIC SCALE 0 6" 1' 2' 3' 4'

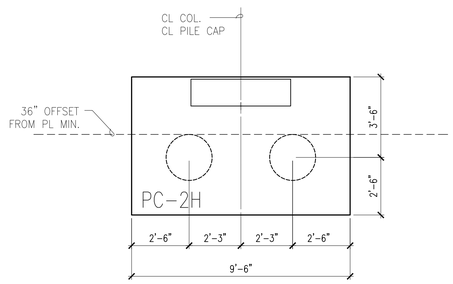

7 PILE CAP TYPE (PC-2H)
SCALE : 3/8" = 1'-0"
GRAPHIC SCALE 0 6" 1' 2' 3' 4'

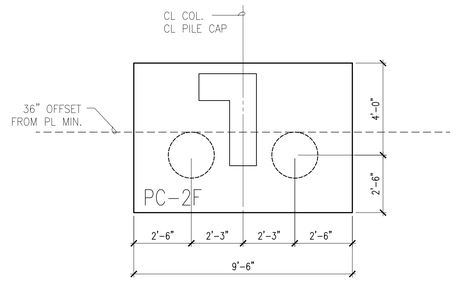

6 PILE CAP TYPE (PC-2F)
SCALE : 3/8" = 1'-0"
GRAPHIC SCALE 0 6" 1' 2' 3' 4'

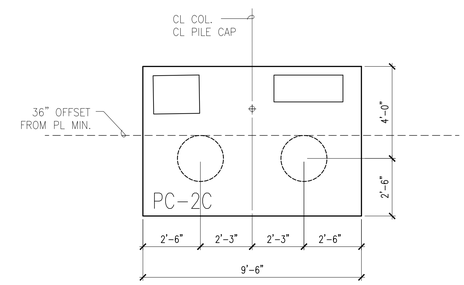

5 PILE CAP TYPE (PC-2C)
SCALE : 3/8" = 1'-0"
GRAPHIC SCALE 0 6" 1' 2' 3' 4'

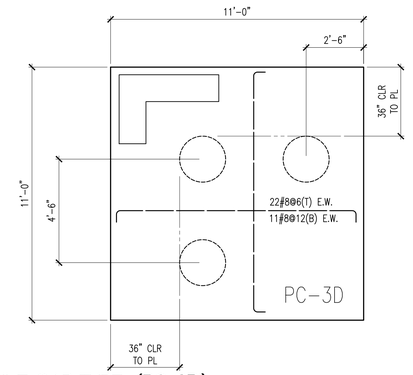

12 PILE CAP TYPE (PC-3D)
SCALE : 3/8" = 1'-0"
GRAPHIC SCALE 0 6" 1' 2' 3' 4'

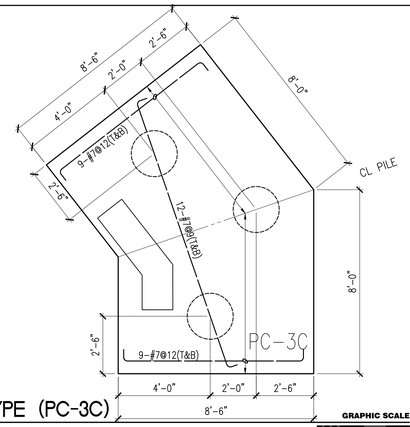

11 PILE CAP TYPE (PC-3C)
SCALE : 3/8" = 1'-0"
GRAPHIC SCALE 0 6" 1' 2' 3' 4'

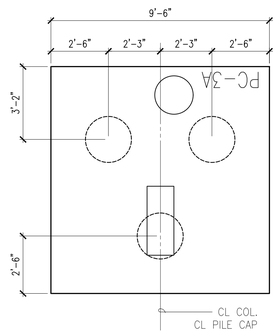

10 PILE CAP TYPE (PC-3A)
SCALE : 3/8" = 1'-0"
GRAPHIC SCALE 0 6" 1' 2' 3' 4'

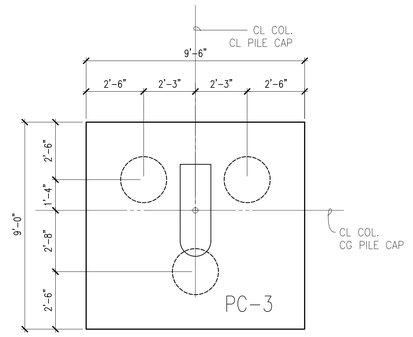

9 PILE CAP TYPE (PC-3)
SCALE : 3/8" = 1'-0"
GRAPHIC SCALE 0 6" 1' 2' 3' 4'

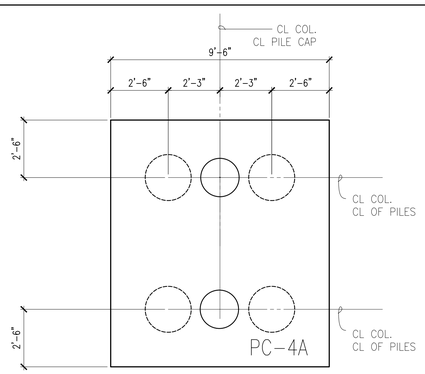

16 PILE CAP TYPE (PC-4A)
SCALE : 3/8" = 1'-0"
GRAPHIC SCALE 0 6" 1' 2' 3' 4'

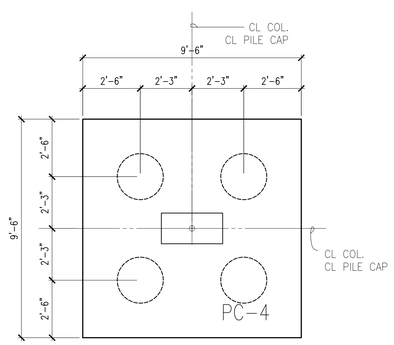

15 PILE CAP TYPE (PC-4)
SCALE : 3/8" = 1'-0"
GRAPHIC SCALE 0 6" 1' 2' 3' 4'

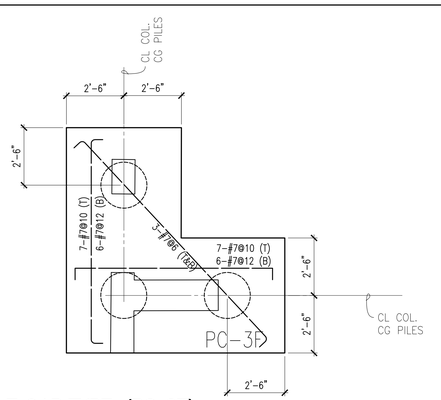

14 PILE CAP TYPE (PC-3F)
SCALE : 3/8" = 1'-0"
GRAPHIC SCALE 0 6" 1' 2' 3' 4'

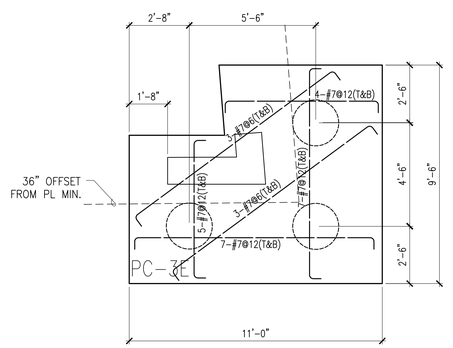

13 PILE CAP TYPE (PC-3E)
SCALE : 3/8" = 1'-0"
GRAPHIC SCALE 0 6" 1' 2' 3' 4'

ALLISON IDE
STRUCTURAL ENGINEERS LLC
900 Fort Street Mall Suite 1670
Honolulu, HI 96813-3717
808 536 2108
johnallison@allisonide.com

JOHN S. ALLISON
LICENSED PROFESSIONAL ENGINEER
No. 5933-S
HAWAII, U.S.A.
Signature
Expiration Date:

This work was prepared by me or under my supervision. Construction of this project will be under my observation. Observation as defined in Section 16-115-2, Hawaii Administrative Rules 8-12-02 Title 16, Chapter 115, Professional Engineers, Architects, Surveyors, and Landscape Architects.

DEVELOPER:
CALIFORNIA INVESTMENT REGIONAL CENTER, LLC

PROJECT OWNER:
HAWAII CITY PLAZA, LP

Hawaii City Plaza
Honolulu, Hawaii
710 Sheridan Street
TMK 2-3-014: Parcels 002, 004, & 011

PERMIT SET

DATE 2019 MARCH 19
AISE JOB No 17001.TD

1	2019 11-15

SHEET TITLE
PILE CAP TYPES

SHEET NO.
S302

P:\17001.TD Hawaii City Plaza 1500 Martin Ln 2018 Items\Working DWG Mirror\17001.TD - S302 - S303 - S304 Pile Pilecap DETAILS.dwg, 3/22/2019 1:26:05 PM, ...\Current Documentation\plot.ctb

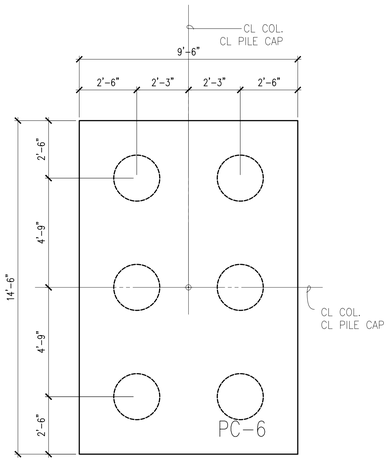

20 PILE CAP TYPE (PC-6)

SCALE : 3/8" = 1'-0"

GRAPHIC SCALE 0 6" 1' 2' 3' 4'

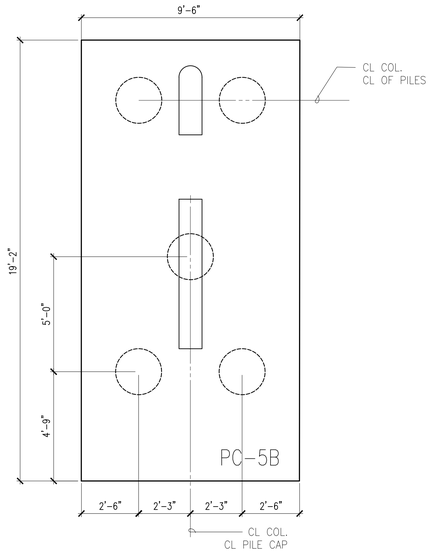

19 PILE CAP TYPE (PC-5B)

SCALE : 3/8" = 1'-0"

GRAPHIC SCALE 0 6" 1' 2' 3' 4'

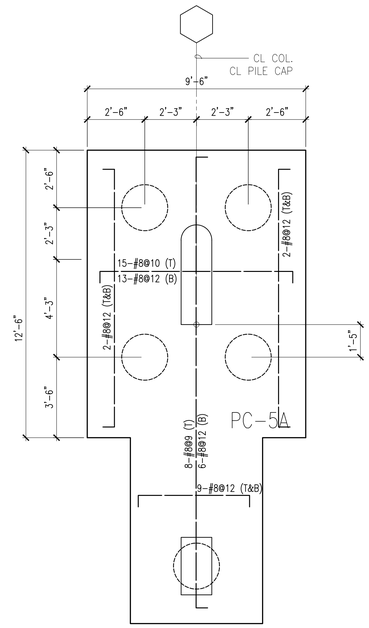

18 PILE CAP TYPE (PC-5A)

SCALE : 3/8" = 1'-0"

GRAPHIC SCALE 0 6" 1' 2' 3' 4'

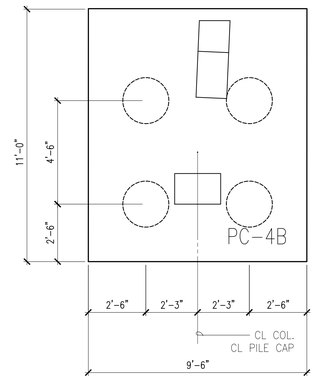

17 PILE CAP TYPE (PC-4B)

SCALE : 3/8" = 1'-0"

GRAPHIC SCALE 0 6" 1' 2' 3' 4'

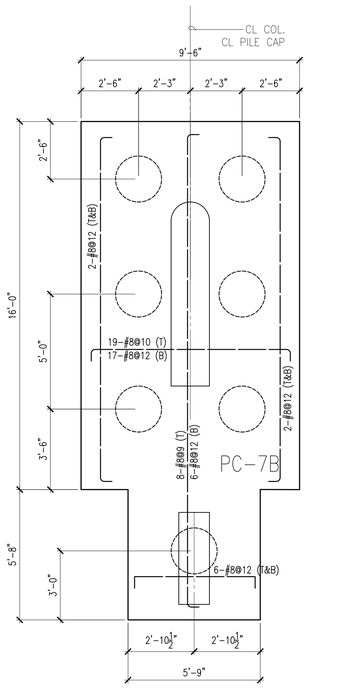

24 PILE CAP TYPE (PC-7B)

SCALE : 3/8" = 1'-0"

GRAPHIC SCALE 0 6" 1' 2' 3' 4'

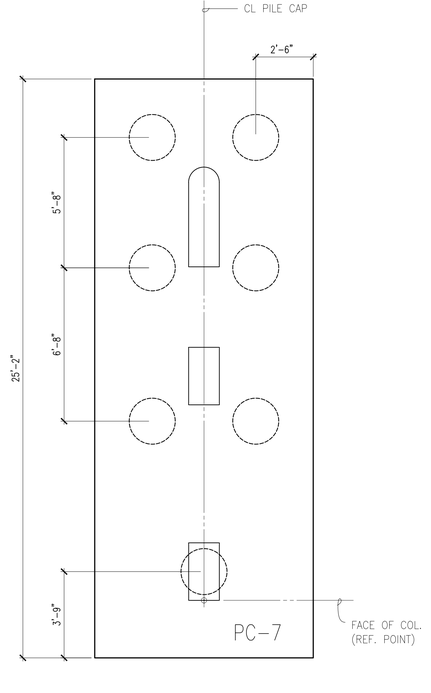

23 PILE CAP TYPE (PC-7)

SCALE : 3/8" = 1'-0"

GRAPHIC SCALE 0 6" 1' 2' 3' 4'

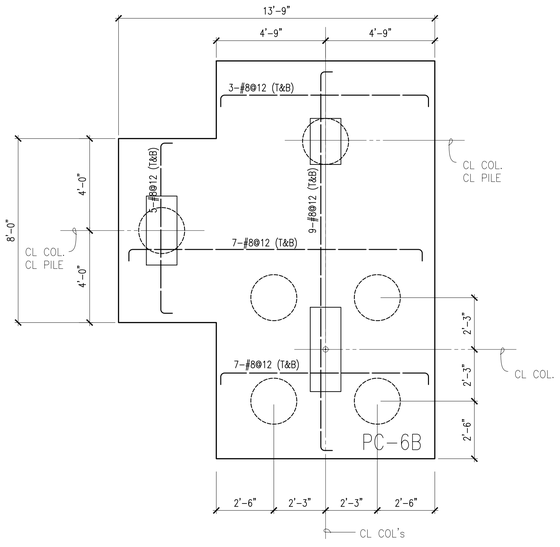

22 PILE CAP TYPE (PC-6B)

SCALE : 3/8" = 1'-0"

GRAPHIC SCALE 0 6" 1' 2' 3' 4'

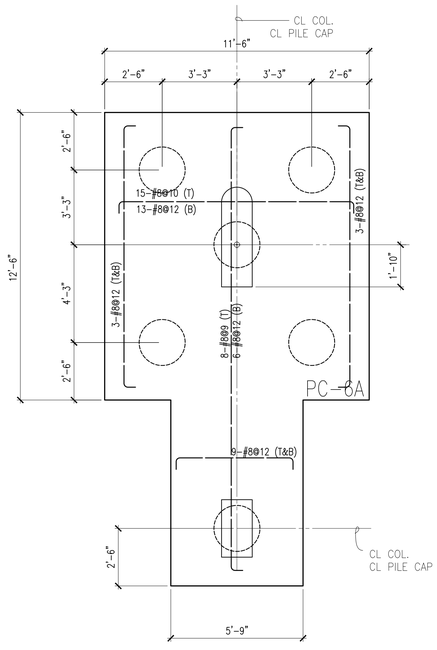

21 PILE CAP TYPE (PC-6A)

SCALE : 3/8" = 1'-0"

GRAPHIC SCALE 0 6" 1' 2' 3' 4'

ALLISON IDE
STRUCTURAL ENGINEERS LLC
900 Fort Street Mall Suite 1670
Honolulu, HI 96813-3717
808 536 2108
johnallison@allisonide.com

JOHN S. ALLISON
LICENSED PROFESSIONAL ENGINEER
No. 5933-S
HAWAII, U.S.A.

Signature
Expiration Date:

This work was prepared by me or under my supervision. Construction of this project will be under my observation. Observation as defined in Section 16-115-2, Hawaii Administrative Rules 3-12-02 Title 16, Chapter 115, Professional Engineers, Architects, Surveyors, and Landscape Architects.

DEVELOPER:
CALIFORNIA INVESTMENT REGIONAL CENTER, LLC

PROJECT OWNER:
HAWAII CITY PLAZA, LP

Hawaii City Plaza
Honolulu, Hawaii

710 Sheridan Street
TMK 2-3-014: Parcels 002, 004, & 011

PERMIT SET

DATE 2019 MARCH 19
AISE JOB No 17001.TD

1	2019 11-15

SHEET TITLE

PILE CAP TYPES

SHEET NO.

S303

S:\17001.TD Hawaii City Plaza HDD March 11, 2019\Working DWG March 11, 2019\17001.TD_S302_S303_S304 File Phase DETAILS.dwg, 3/22/2019 1:26:05 PM, AutoCAD PDF (General Documentation).pc3

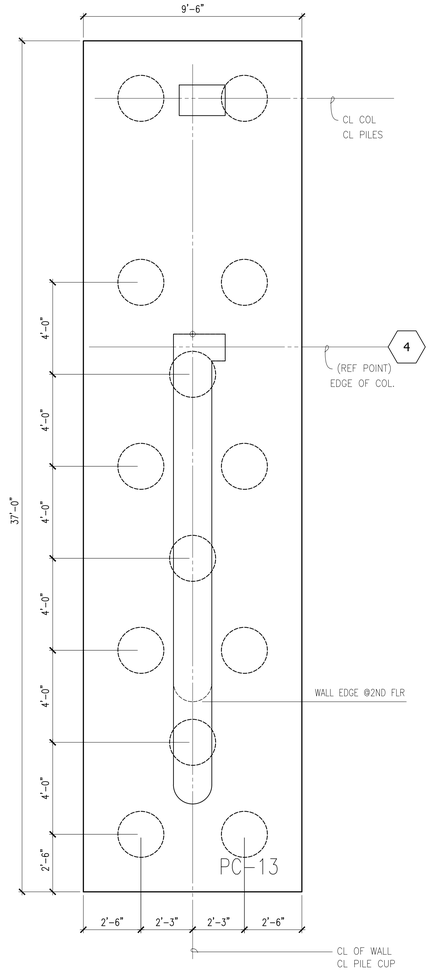

26 PILE CAP TYPE (PC-13)
SCALE : 3/8" = 1'-0"
GRAPHIC SCALE
0 6" 1' 2' 3' 4'

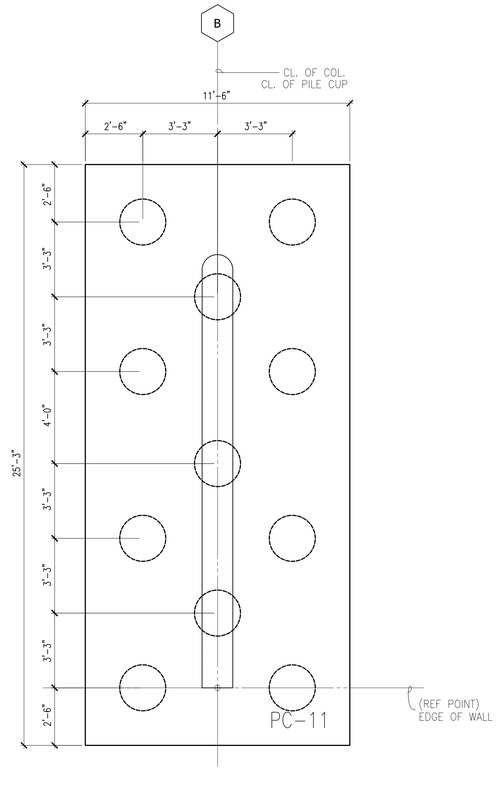

25 PILE CAP TYPE (PC-11)
SCALE : 3/8" = 1'-0"
GRAPHIC SCALE
0 6" 1' 2' 3' 4'

AISE
ALLISON IDE
STRUCTURAL ENGINEERS LLC
900 Fort Street Mall Suite 1670
Honolulu, HI 96813-3717
808 536 2108
johnallison@allisonide.com

JOHN S. ALLISON
LICENSED PROFESSIONAL ENGINEER
No. 5933-S
HAWAII, U.S.A.
Signature
Expiration Date:

This work was prepared by me or under my supervision. Construction of this project will be under my observation. Observation as defined in Section 16-115-2 of Hawaii Administrative Rules 9-12-02 Title 16, Chapter 115, Professional Engineers, Architects, Surveyors, and Landscape Architects.

DEVELOPER:
CALIFORNIA INVESTMENT REGIONAL CENTER, LLC

PROJECT OWNER:
HAWAII CITY PLAZA, LP

Hawaii City Plaza
Honolulu, Hawaii
710 Sheridan Street
TMK 2-3-014: Parcels 002, 004, & 011

PERMIT SET

DATE 2019 MARCH 19
AISE JOB No 17001.TD

1	2018 11-16

SHEET TITLE
PILE CAP TYPES

SHEET NO.
S304

\2017 JOBS\17001.TD Hawaii City Plaza TOD March 11 2018 home\Working DWG March 11 2018\17001.TD S302-S303-S304 Pile Pilecap DETAILS.dwg, 3/22/2019 1:26:13 PM, AutoCAD PDF (General Documentation).pc3

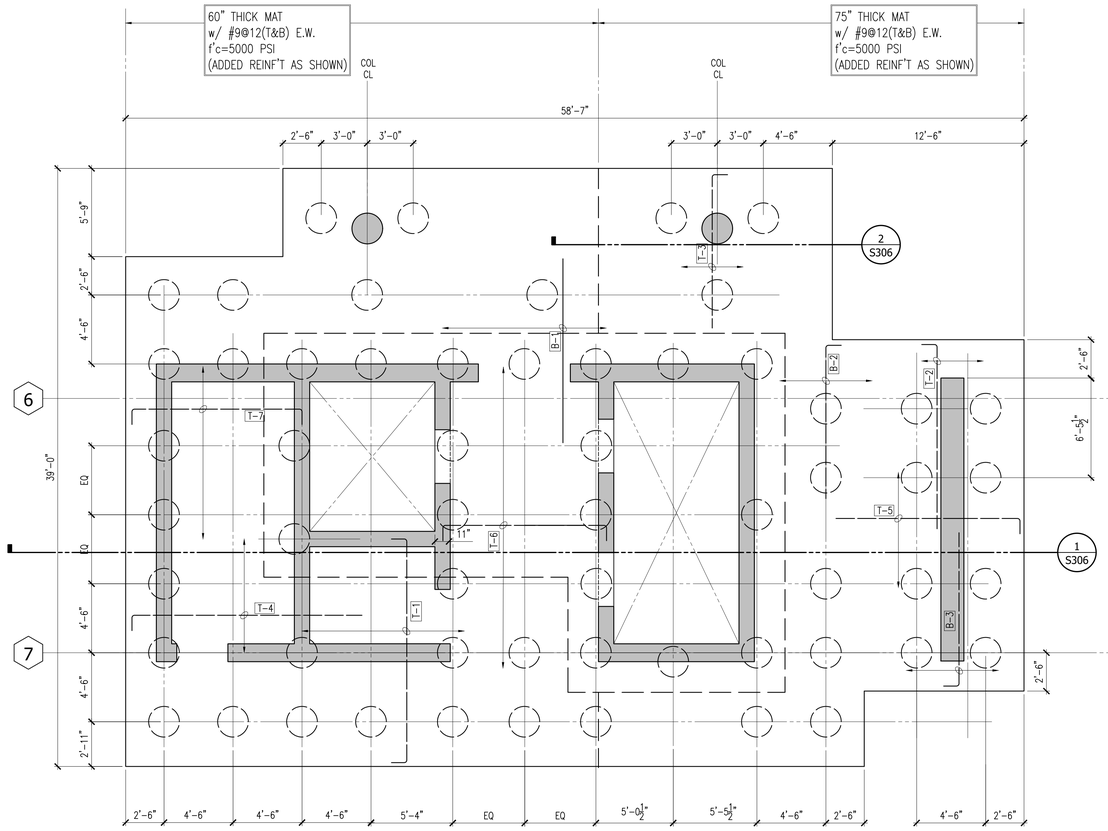

1 PILE - MAT AT CORES PLAN
SCALE 1/4" = 1'-0"
GRAPHIC SCALE

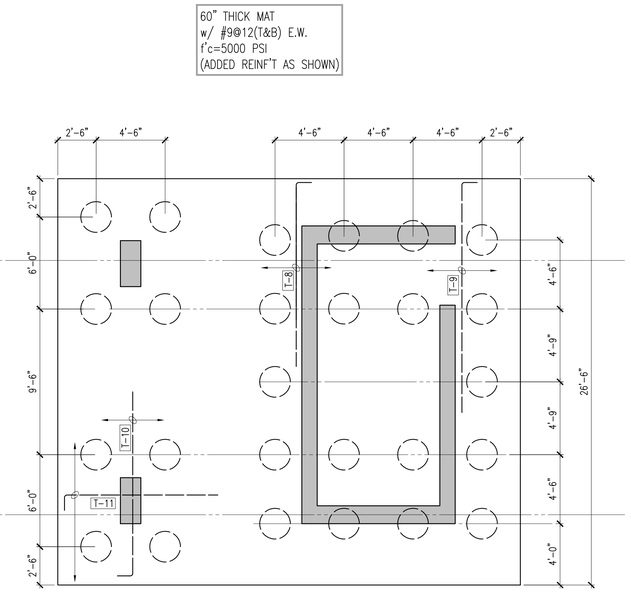

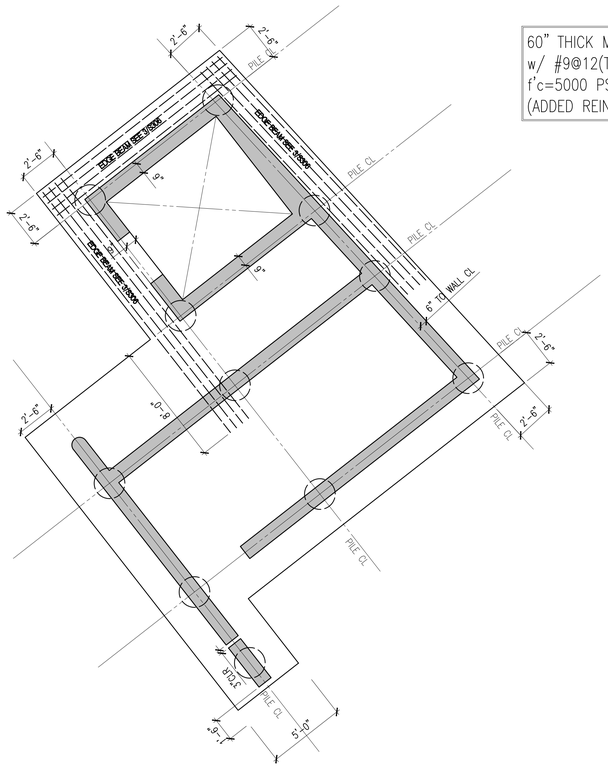

2 PILE-MAT STAIR 3 PLAN
SCALE 1/4" = 1'-0"
GRAPHIC SCALE

ADDED BARS:		LENGTH (H):
T-1	10#9(T)@12	
T-2	5#9(T)@12	12'-0"
T-3	3#9(T)@12	
T-4	7#9(T)@12	15'-0"
T-5	6#9(T)@18	12'-0"
T-6	13#9(T)@18	
T-7	7#9(T)@18	
T-8	7#9(T)@9	
T-9	7#9(T)@9	15'-0"
T-10	5#9(T)@12	12'-0"
T-11	10#9(T)@12	10'-0"
B-1	6#9(T)@18	12'-0"
B-2	5#9(T)@18	10'-0"
B-3	4#9(T)@18	10'-0"

AISE
ALLISON IDE
STRUCTURAL ENGINEERS LLC
900 Fort Street Mall Suite 1670
Honolulu, HI 96813-3717
808 536 2108
johnallison@allisonide.com

JOHN S. ALLISON
LICENSED PROFESSIONAL ENGINEER
No. 5933-S
HAWAII, U.S.A.
Signature
Expiration Date:

This work was prepared by me or under my supervision. Construction of this project will be under my observation. Observation as defined in Section 16-115-2 of Hawaii Administrative Rules 9-12-02 Title 16, Chapter 115, Professional Engineers, Architects, Surveyors, and Landscape Architects.

DEVELOPER:
CALIFORNIA INVESTMENT REGIONAL CENTER, LLC

PROJECT OWNER:
HAWAII CITY PLAZA, LP

Hawaii City Plaza
Honolulu, Hawaii
710 Sheridan Street
TMK 2-3-014: Parcels 002, 004, & 011

PERMIT SET

DATE 2019 MARCH 19
AISE JOB No 17001.TD

1 2018 11-16

SHEET TITLE
MAT PILES PLAN

SHEET NO.
S305

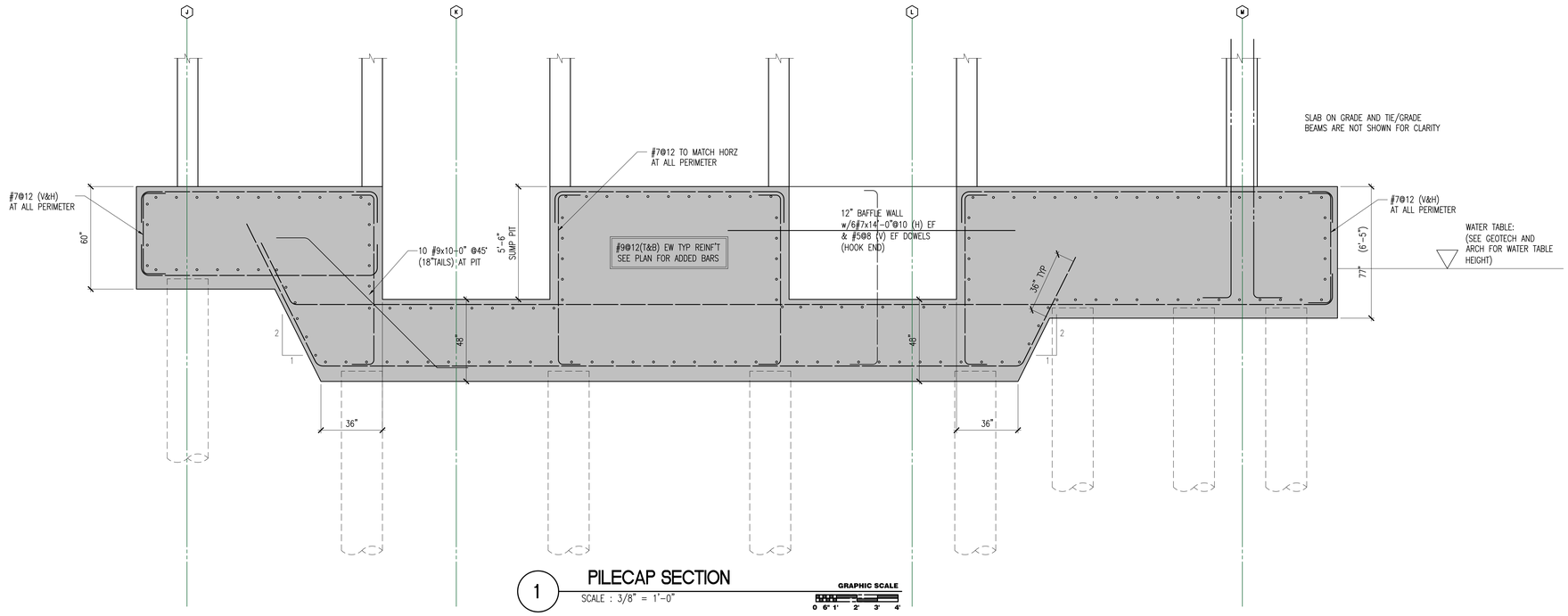

1 PILECAP SECTION
SCALE : 3/8" = 1'-0"
GRAPHIC SCALE
0 6" 1' 2' 3' 4'

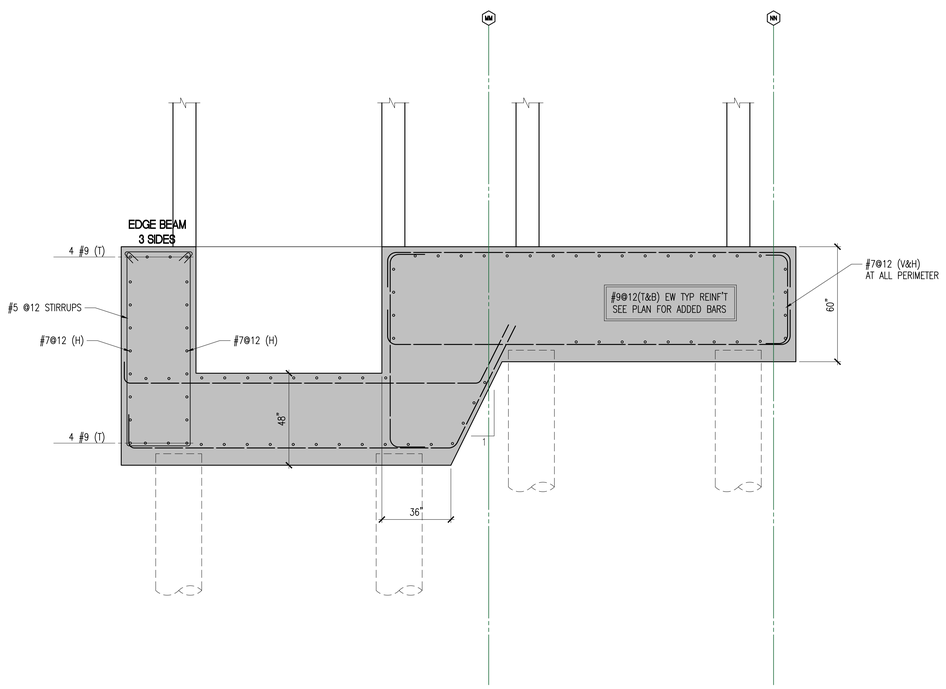

3 PILECAP SECTION
SCALE : 3/8" = 1'-0"
GRAPHIC SCALE
0 6" 1' 2' 3' 4'

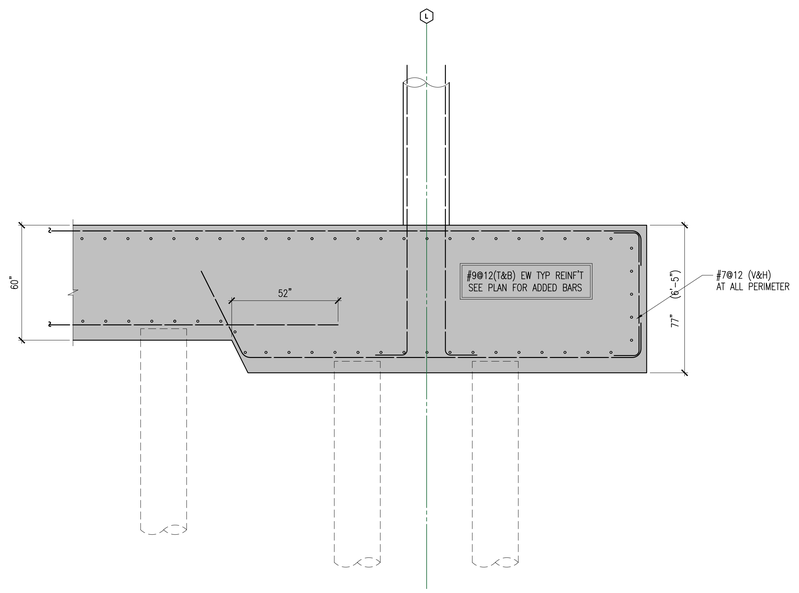

2 PILECAP SECTION
SCALE : 3/8" = 1'-0"
GRAPHIC SCALE
0 6" 1' 2' 3' 4'

AISE
ALLISON IDE
STRUCTURAL ENGINEERS LLC
900 Fort Street Mall Suite 1670
Honolulu, HI 96813-3717
808 536 2108
johnallison@allisonide.com

JOHN S. ALLISON
LICENSED PROFESSIONAL ENGINEER
No. 5933-S
HAWAII, U.S.A.
Signature
Expiration Date:

This work was prepared by me or under my supervision. Construction of this project will be under my observation. Observation as defined in Section 16-115-2 of Hawaii Administrative Rules 9-12-02 Title 16, Chapter 115, Professional Engineers, Architects, Surveyors, and Landscape Architects.

DEVELOPER:
CALIFORNIA INVESTMENT REGIONAL CENTER, LLC

PROJECT OWNER:
HAWAII CITY PLAZA, LP

Hawaii City Plaza
Honolulu, Hawaii
710 Sheridan Street
TMK 2-3-014: Parcels 002, 004, & 011

PERMIT SET

DATE 2019 MARCH 19
AISE JOB No 17001.TD

1	2018 11-16

SHEET TITLE
MAT SECTIONS

SHEET NO.
S306

I:\2017 JOBS\17001.TD Hawaii City Plaza TOD March 11 2018 home\Working DWG March 11 2018\17001.TD S301-S305-306 Pile Pilecap Sched and MAT FND.dwg, 3/22/2019 1:26:29 PM, AutoCAD PDF (General Documentation).pc3

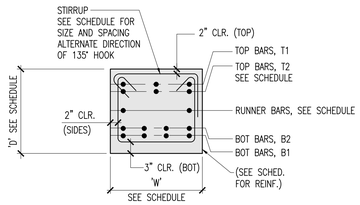

NOTES:
1. SEE 2,3,4,5,6,7/S311 FOR OTHER TYPICAL BEAM DETAILS.
2. USE DOUBLE STIRRUPS FOR GRADE BEAMS WIDER THAN 30"

3 GRADE BEAM SECTION
NOT TO SCALE

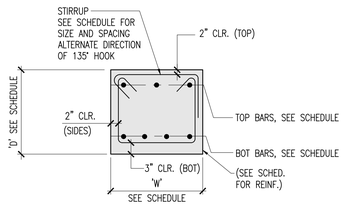

NOTES:
1. SEE 2,3,4,5,6,7/S311 FOR OTHER TYPICAL BEAM DETAILS.

2 TIE BEAM SECTION
NOT TO SCALE

MARK	DIMENSION		LONGITUDINAL BARS (TOP & BOT) SEE NOTE '4' FOR RUNNER BARS		STIRRUPS		REFERENCE DETAIL	REMARKS
	W	D	TOP BARS	BOTTOM BARS	SIZE	SPACING		
TB-1	18"	18"	3-#6 CONT.	3-#6 CONT.	#3	10"	2/S311	
GB-1	24"	24"	4-#8 CONT.	4-#8 CONT.	#4	10"	3/S311	1-#5 CONT. RUNNER BARS EA. SIDE FACE
GB-2	24"	28"	8-#8 CONT.	4-#8 CONT.	SEE 4/S313		3/S311	1-#5 CONT. RUNNER BARS EA. SIDE FACE
GB-21	24"	30"	4-#8 CONT.	8-#8 CONT.	#4	12"	3/S311	1-#5 CONT. RUNNER BARS EA. SIDE FACE
GB-22	30"	36"	5-#8 CONT.	10-#8 CONT. (2 LAYERS)	#4	10"	3/S311	2-#5 CONT. RUNNER BARS EA. SIDE FACE
GB-23	30"	36"	6-#8 CONT.	8-#8 CONT. (2 LAYERS)	#4 STIRRUPS: 8@6", 4@8",BAL 12"		3/S311	2-#5 CONT. RUNNER BARS EA. SIDE FACE
GB-3	36"	38"	10-#8 CONT. (2 LAYERS)	5-#8 CONT.	SEE 3/S312		3/S311	DOUBLE STIRRUP 2-#5 CONT. RUNNER BARS EA. SIDE FACE
GB-31	36"	38"	10-#8 CONT. (2 LAYERS)	5-#8 CONT.	SEE 3/S312		3/S311	DOUBLE STIRRUP 2-#5 CONT. RUNNER BARS EA. SIDE FACE
GB-4	30"	40"	10-#9 CONT. (2 LAYERS)	5-#9 CONT.	SEE 1/S312		3/S311	2-#5 CONT. RUNNER BARS EA. SIDE FACE
GB-41	30"	40"	10-#9 CONT. (2 LAYERS)	5-#9 CONT.	SEE 1/S312		3/S311	2-#5 CONT. RUNNER BARS EA. SIDE FACE
GB-5	30"	42"	11-#9 CONT. (2 LAYERS)	5-#9 CONT.	SEE 1/S312 (SIMILAR)		3/S311	2-#5 CONT. RUNNER BARS EA. SIDE FACE
GB-51	30"	42"	11-#9 CONT. (2 LAYERS)	5-#9 CONT.	SEE 1/S312 (SIMILAR)		3/S311	2-#5 CONT. RUNNER BARS EA. SIDE FACE

NOTES:
1. EXTEND LONGITUDINAL BARS THRU PILE CAPS. WHERE GRADE / TIE BEAMS DO NOT GO THRU PILE CAP, RUN LONGITUDINAL BARS TO OPPOSITE FACE OF PILE CAP AND TERMINATE w/ STANDARD HOOK. SEE 1/S311
2. TOP LONGITUDINAL BARS MAY BE SPLICED AT MIDDLE 1/3 SPAN OF GRADE / TIE BEAM. BOTTOM LONGITUDINAL BARS MAY BE SPLICED ADJACENT TO FACE OF PILECAP.
3. START STIRRUPS AT FACE OF PILE CAPS.
4. FOR GRADE BMS DEEPER THAN 18", ADD #5 @ 12"(H) RUNNER BARS AT EA. FACE OF BM.
5. SEE DETAILS 1,2,3,4,5,6&7/S311 FOR TYPICAL GRADE/TIE BEAM DETAILS.,

A GRADE BEAM AND TIE BEAM SCHEDULE
NOT TO SCALE

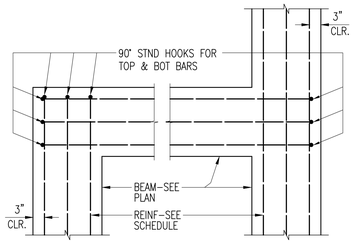

5 TYPICAL GRADE/TIE BEAM REINFORCING AT INTERSECTIONS - PLAN
NOT TO SCALE

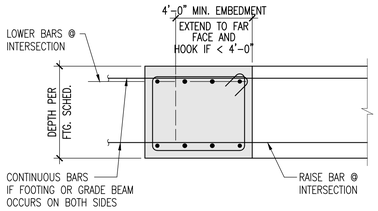

4 INTERSECTING TIE BM. OR GRADE BM. DETAIL
NOT TO SCALE

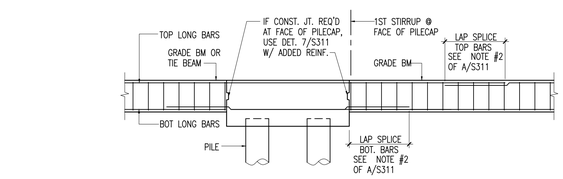

1A SECTION (GRADE BEAM (ON BOTH SIDES OF PILECAP)

BAR SIZE	TENSION LAP SPLICE L (IN)
#6	46
#7	66
#8	76
#9	85

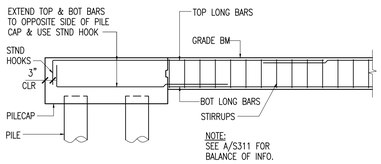

1B SECTION (GRADE BEAM (ON ONE SIDE OF PILECAP)

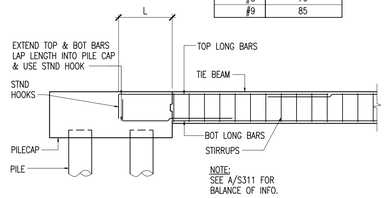

1C SECTION (TIE BEAM (ON ONE SIDE OF PILECAP)

1 GRADE/TIE BEAM TO PILE CAP CONNECTION
NOT TO SCALE

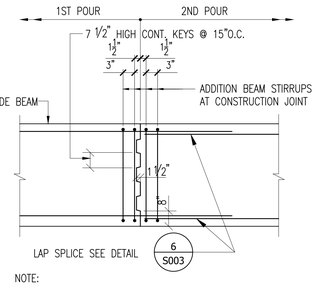

NOTE:
WHERE CONT. FOOTING IS UNDER A WALL, LOCATE CONSTRUCTION JOINT IN MIDDLE 1/3 OF THE CLEAR OPENING WIDTH ABOVE, OR IN MIDDLE 1/3 OF THE DISTANCE BETWEEN COLUMNS.

7 TIE BEAM OR GRADE BEAM CONSTRUCTION JOINT

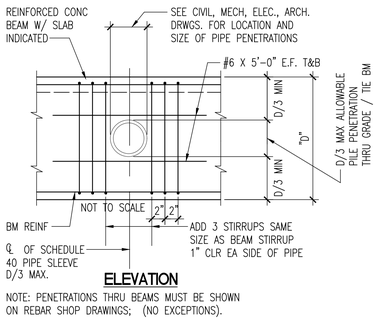

ELEVATION

NOTE: PENETRATIONS THRU BEAMS MUST BE SHOWN ON REBAR SHOP DRAWINGS; (NO EXCEPTIONS).

6 PIPE PENETRATION THRU GRADE / TIE BEAMS
NOT TO SCALE

ALLISON IDE
STRUCTURAL ENGINEERS LLC
900 Fort Street Mall Suite 1670
Honolulu, HI 96813-3717
808 536 2108
johnallison@allisonide.com

JOHN S. ALLISON
LICENSED PROFESSIONAL ENGINEER
No. 5933-S
HAWAII, U.S.A.
Signature
Expiration Date:

This work was prepared by me or under my supervision. Construction of this project will be under my observation. Observation as defined in Section 16-115-2, Hawaii Administrative Rules 9-12-02 Title 16, Chapter 115, Professional Engineers, Architects, Surveyors, and Landscape Architects.

DEVELOPER:
CALIFORNIA INVESTMENT REGIONAL CENTER, LLC

PROJECT OWNER:
HAWAII CITY PLAZA, LP

Hawaii City Plaza
Honolulu, Hawaii
710 Sheridan Street
TMK 2-3-014: Parcels 002, 004, & 011

PERMIT SET

DATE 2019 MARCH 19
AISE JOB No 17001.TD

1	2018 11-16	

SHEET TITLE
GRADE / TIE BEAM SCHEDULE AND DETAILS

SHEET NO.
S311

K:\2017_JOBS\17001.TD Hawaii City Plaza TOD March 11 2018\Frame Working DWG March 11 2018\17001.TD S311 GRADE BEAM DET & SCHED.dwg, 3/22/2019 1:26:37 PM, AutoCAD PDF (General Documentation).pc3

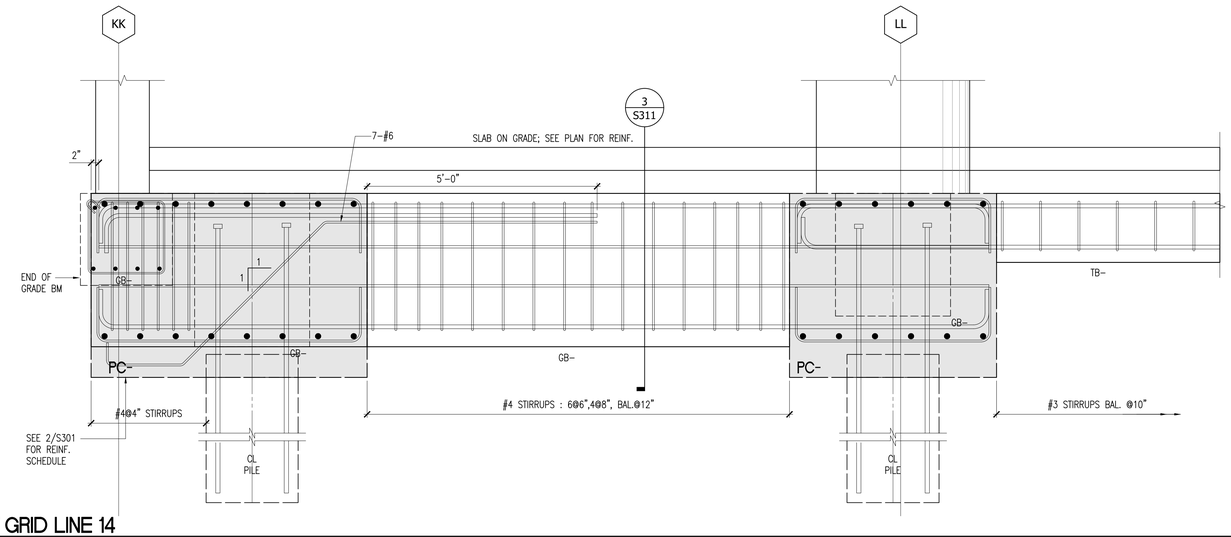

1 GRADE BEAM SECTION AT GRID LINE 14
SCALE: 3/4" = 1'-0"

GRAPHIC SCALE 0 6" 1' 2'

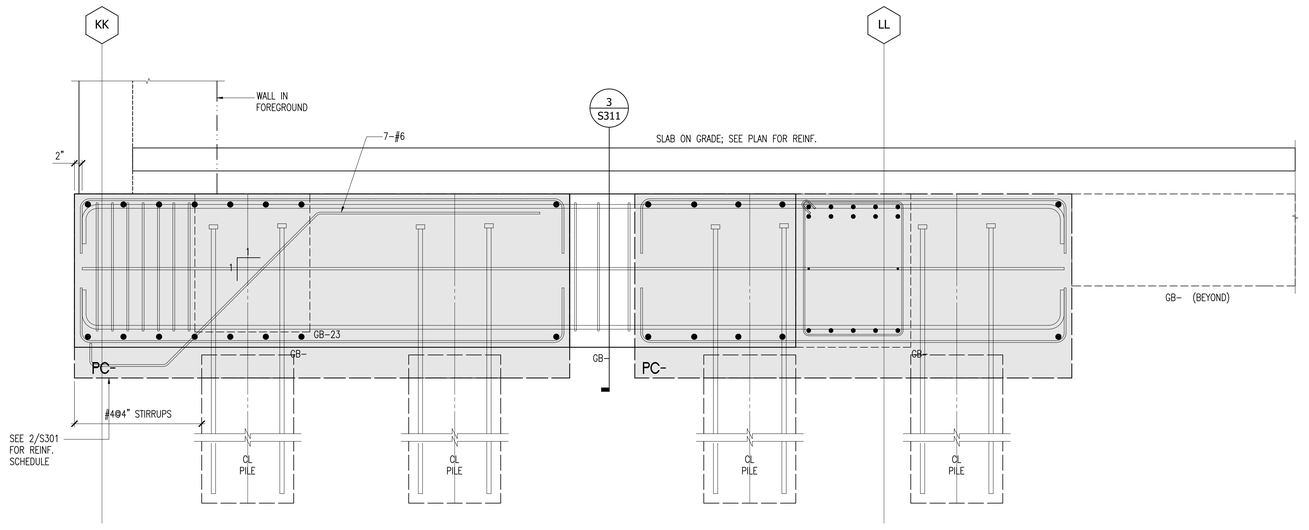

2 GRADE BEAM SECTION AT GRID LINE 12
SCALE: 3/4" = 1'-0"

GRAPHIC SCALE 0 6" 1' 2'

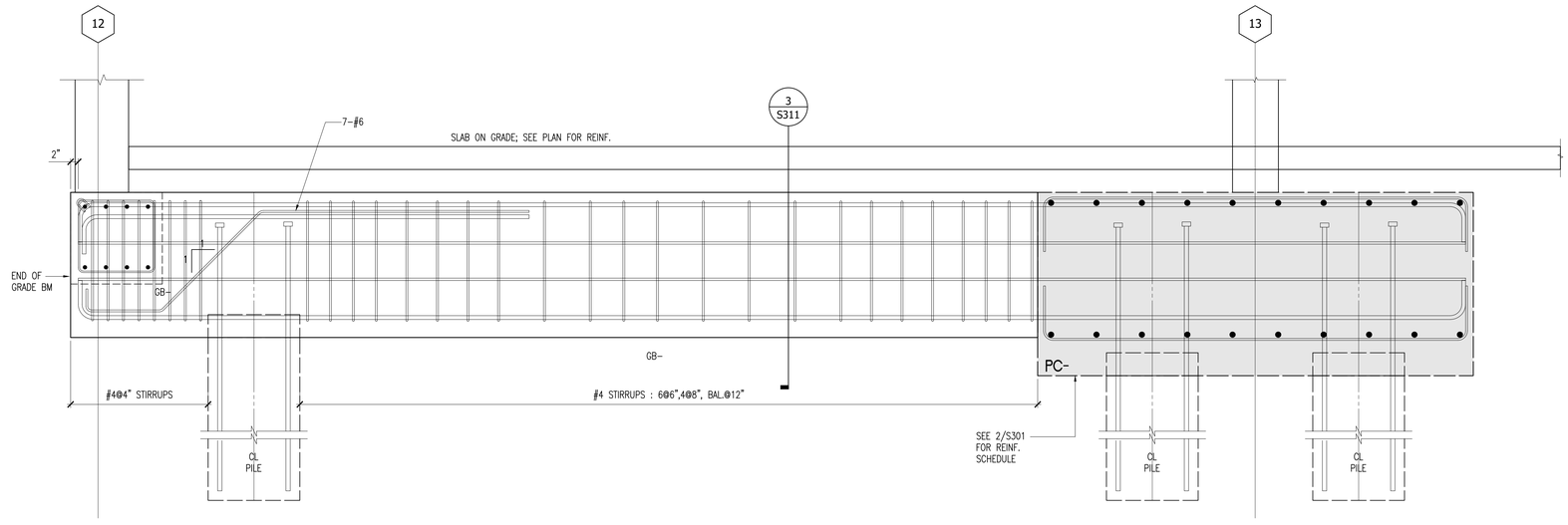

3 GRADE BEAM SECTION AT GRID LINE RR
SCALE: 3/4" = 1'-0"

GRAPHIC SCALE 0 6" 1' 2'

AISE
ALLISON IDE
STRUCTURAL ENGINEERS LLC
900 Fort Street Mall Suite 1670
Honolulu, HI 96813-3717
808 536.2108
johnallison@allisonide.com

JOHN S. ALLISON
LICENSED PROFESSIONAL ENGINEER
No. 5933-S
HAWAII, U.S.A.

Signature
Expiration Date

This work was prepared by me or under my supervision. Construction of this project will be under my observation. Observation as defined in Section 16-115-2 of Hawaii Administrative Rules 9-12-02 Title 16, Chapter 115, Professional Engineers, Architects, Surveyors, and Landscape Architects.

DEVELOPER:
CALIFORNIA INVESTMENT REGIONAL CENTER, LLC

PROJECT OWNER:
HAWAII CITY PLAZA, LP

Hawaii City Plaza
Honolulu, Hawaii
710 Sheridan Street
TMK 2-3-014: Parcels 002, 004, & 011

PERMIT SET

DATE 2019 MARCH 19
AISE JOB No 17001.TD

1	2018 11-16

SHEET TITLE
GRADE BEAM SECTIONS

SHEET NO.
S312

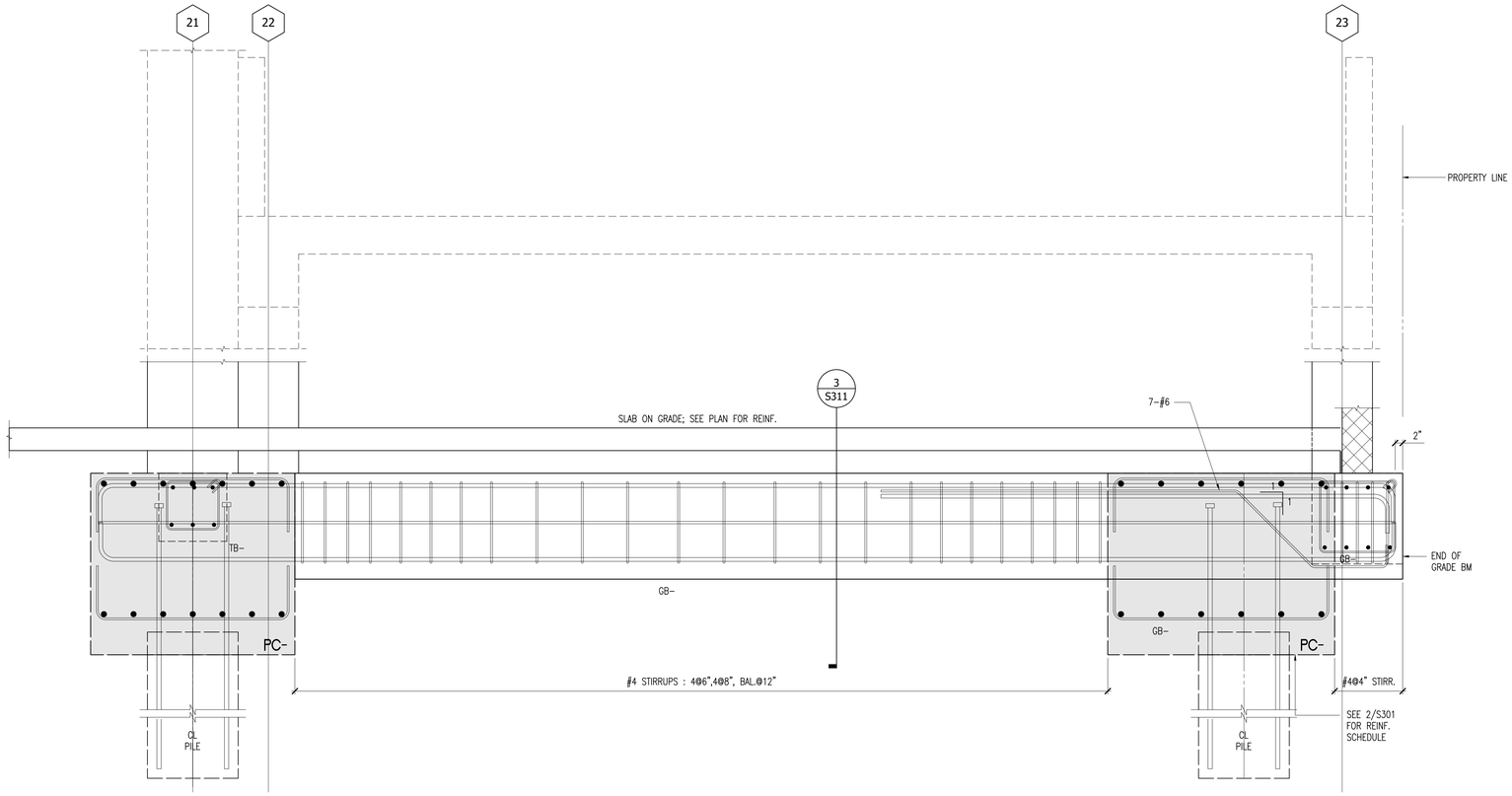

4 GRADE BEAM SECTION AT GRID LINE Z
SCALE: 3/4" = 1'-0"

GRAPHIC SCALE
0 6" 1' 2'

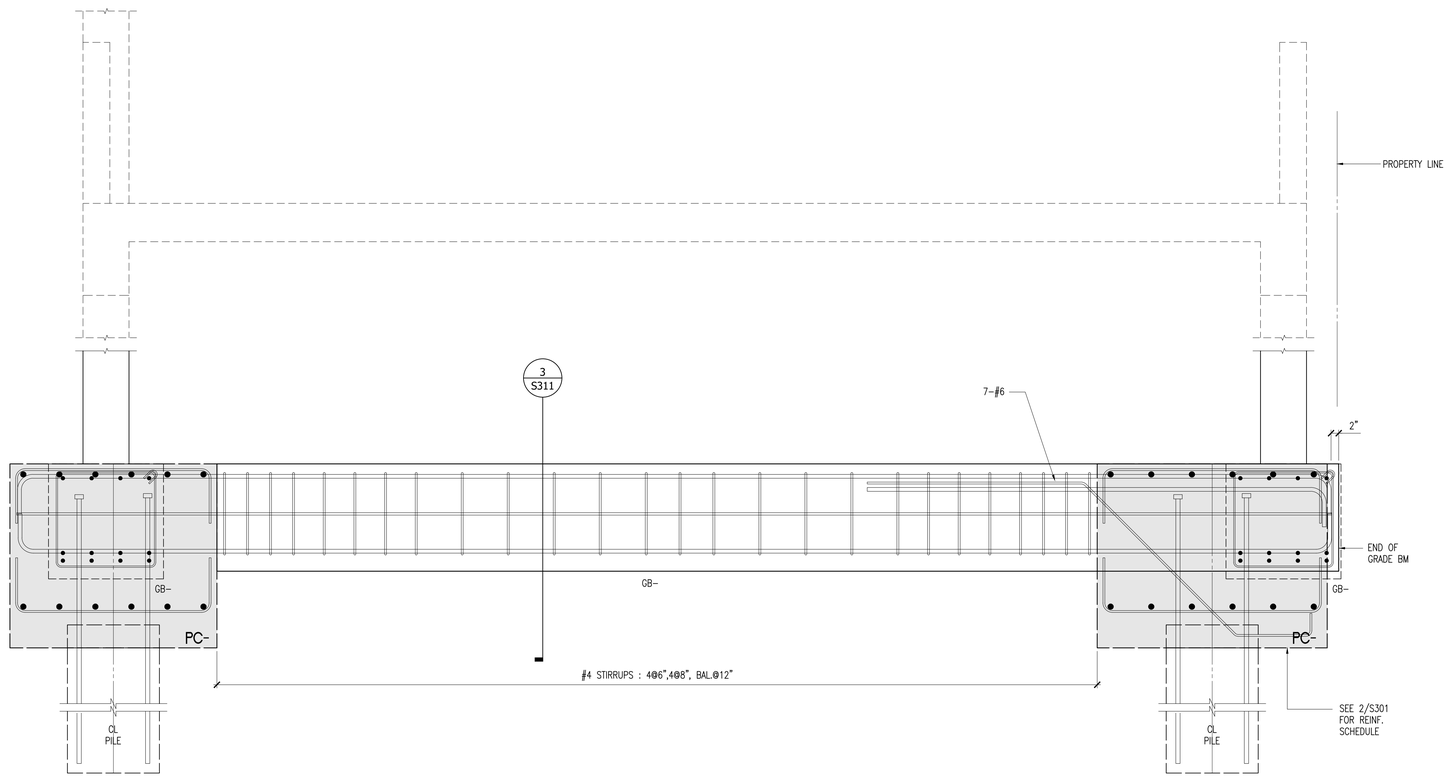

5 GRADE BEAM SECTION AT RAMP
SCALE: 3/4" = 1'-0"

GRAPHIC SCALE
0 6" 1' 2'

AISE
ALLISON IDE
STRUCTURAL ENGINEERS LLC
900 Fort Street Mall Suite 1670
Honolulu, HI 96813-3717
808 536 2108
johnallison@allisonide.com

JOHN S. ALLISON
LICENSED PROFESSIONAL ENGINEER
No. 5933-S
HAWAII, U.S.A.
Signature
Expiration Date:

This work was prepared by me or under my supervision. Construction of this project will be under my observation. Observation as defined in Section 16-115-2 of Hawaii Administrative Rules 9-12-02 Title 16, Chapter 115, Professional Engineers, Architects, Surveyors, and Landscape Architects.

DEVELOPER:
CALIFORNIA INVESTMENT REGIONAL CENTER, LLC

PROJECT OWNER:
HAWAII CITY PLAZA, LP

Hawaii City Plaza
Honolulu, Hawaii
710 Sheridan Street
TMK 2-3-014: Parcels 002, 004, & 011

PERMIT SET

DATE 2019 MARCH 19
AISE JOB No 17001.TD

1	2018 11-16

SHEET TITLE
GRADE BEAM SECTIONS

SHEET NO.
S313

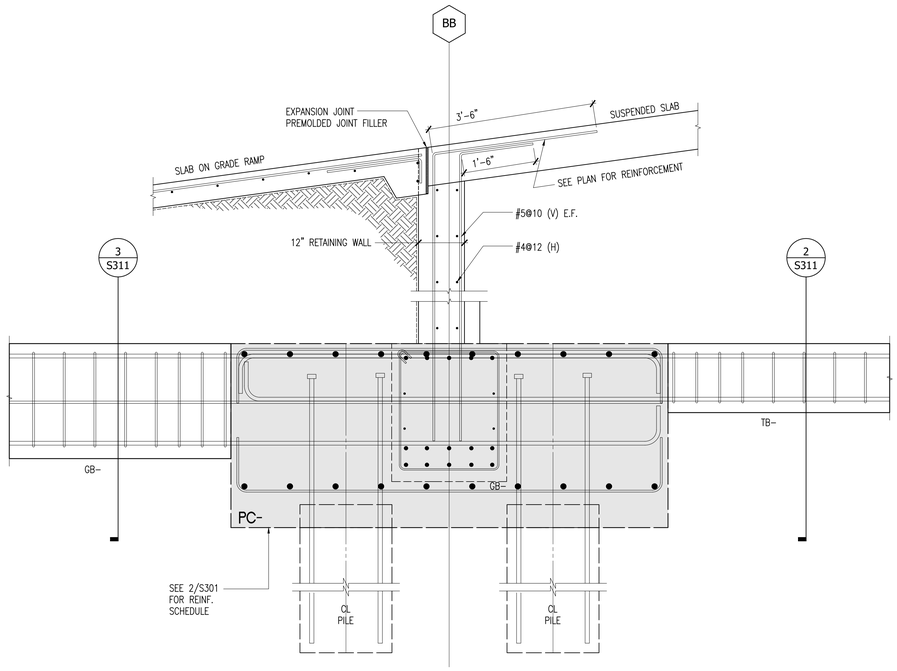

6 GRADE BEAM SECTION AT GRID LINE BB

SCALE: 3/4" = 1'-0"

GRAPHIC SCALE 0 6" 1' 2'

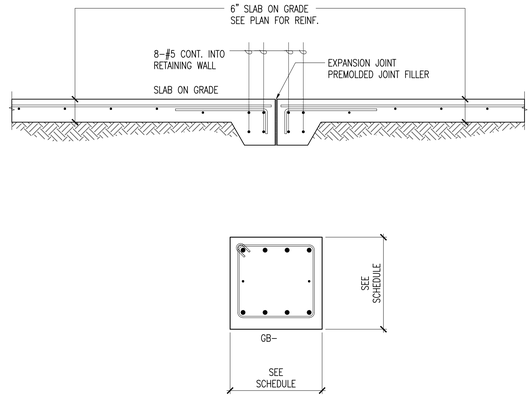

7 GRADE BEAM SECTION

SCALE: 3/4" = 1'-0"

GRAPHIC SCALE 0 6" 1' 2'

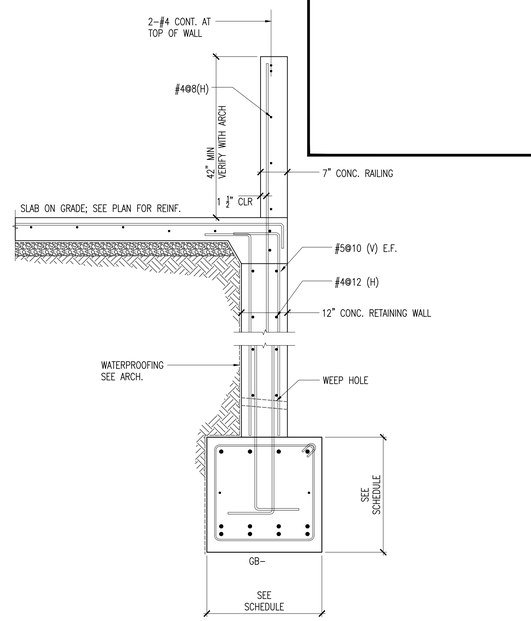

8 GRADE BEAM SECTION AT RETAINING WALL

SCALE: 3/4" = 1'-0"

GRAPHIC SCALE 0 6" 1' 2'

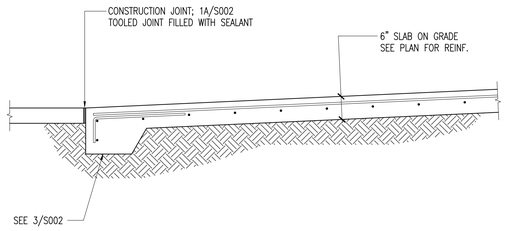

9 SECTION AT RAMP

SCALE: 3/4" = 1'-0"

GRAPHIC SCALE 0 6" 1' 2'

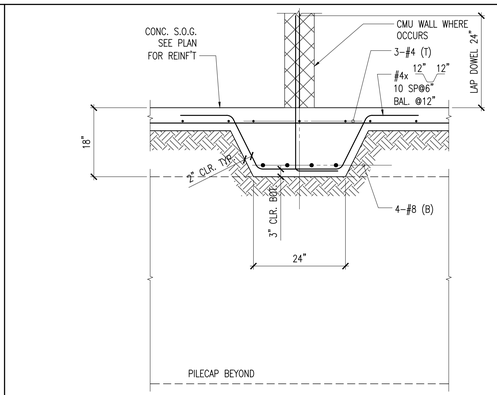

10 THICKENED SLAB TS-2.0

SCALE: 3/4" = 1'-0"

GRAPHIC SCALE 0 6" 1' 2'

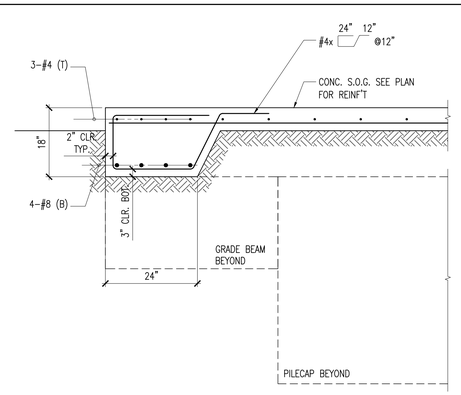

11 THICKENED SLAB TS-2.0

SCALE: 3/4" = 1'-0"

GRAPHIC SCALE 0 6" 1' 2'

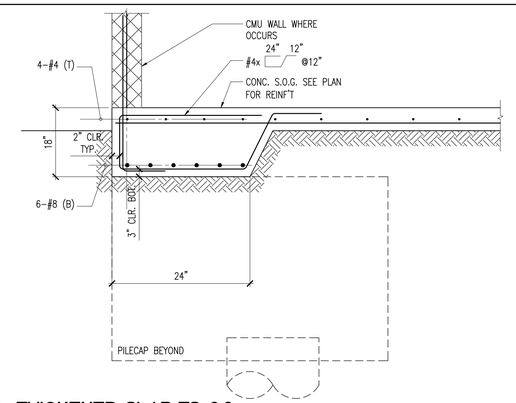

12 THICKENED SLAB TS-3.0

SCALE: 3/4" = 1'-0"

GRAPHIC SCALE 0 6" 1' 2'

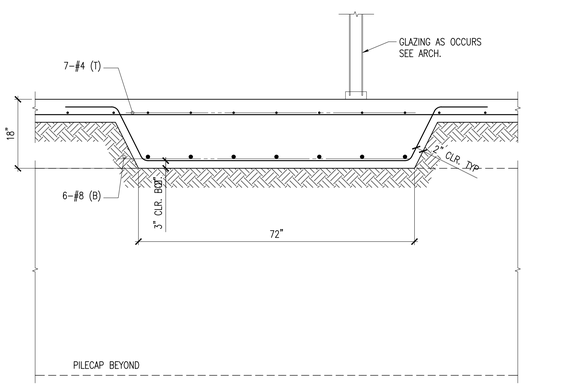

13 THICKENED SLAB TS-6.0

SCALE: 3/4" = 1'-0"

GRAPHIC SCALE 0 6" 1' 2'

ALLISON IDE
STRUCTURAL ENGINEERS LLC
900 Fort Street Mall Suite 1670
Honolulu, HI 96813-3717
808 536 2108
johnallison@allisonide.com

JOHN S. ALLISON
LICENSED
PROFESSIONAL
ENGINEER
No. 5933-S
HAWAII, U.S.A.

Signature
Expiration Date:

This work was prepared by me or under my supervision. Construction of this project will be under my observation. Observation as defined in Section 16-115-2, Hawaii Administrative Rules 3-12-02 Title 16, Chapter 115, Professional Engineers, Architects, Surveyors, and Landscape Architects.

DEVELOPER:
CALIFORNIA INVESTMENT
REGIONAL CENTER, LLC

PROJECT OWNER:
HAWAII CITY PLAZA, LP

Hawaii City Plaza
Honolulu, Hawaii

710 Sheridan Street
TMK 2-3-014: Parcels 002, 004, & 011

PERMIT
SET

DATE 2019 MARCH 19
AISE JOB No 17001.TD

1	2018 11-16	

SHEET TITLE

GRADE BEAM
SECTIONS

SHEET NO.

S314

P:\17001.TD Hawaii City Plaza 710 Sheridan St\Working DWG Mirror\17001.TD Hawaii City Plaza 2018 Permit Set (General Documentation).pln3
P:\17001.TD Hawaii City Plaza 710 Sheridan St\Working DWG Mirror\17001.TD Hawaii City Plaza 2018 Permit Set (Grade Beam Sections).dwg, 3/22/2019 12:55:51 PM

POST TENSIONING NOTES:

1. PRESTRESSING STEEL SHALL BE SEVEN–WIRE, LOW–RELAXATION STRAND FOR PRESTRESSED CONCRETE MANUFACTURED IN ACCORDANCE WITH ASTM A416 AND FREE FROM CORROSION HAVING A GUARANTEED MINIMUM ULTIMATE TENSILE STRENGTH OF 270 KSI.

   NOMINAL DIAMETER............................1/2 IN.
   AREA...0.153 SQ. IN.
   MODULUS OF ELASTICITY...................28,500 KSI
   ULTIMATE STRENGTH..........................41.3 KIPS
   MAXIMUM TEMPORARY FORCE............33.0 KIPS
   ANCHORING FORCE.............................28.9 KIPS
   FINAL EFFECTIVE FORCE.....................26.8 KIPS

2. STRAND MUST BE COATED WITH A RUST PREVENTIVE MASTIC AND ENCLOSED IN A SEAMLESS PLASTIC SLIPPAGE SHEATHING. TORN OR DAMAGED SHEATHING SHALL BE PATCHED BEFORE CONCRETE POUR.

3. ANCHORAGES

   A. ALL PRESTRESSING ANCHORAGES SHALL MEET THE MINIMUM REQUIREMENTS SET FORTH IN A.C.I. STANDARD BUILDING CODE REQUIREMENTS FOR REINFORCED CONCRETE (ACI–318–LATEST EDITION).

   B. ANCHORAGES WITH REUSABLE GROMMETS SHALL BE USED AT ALL STRESSING ENDS WHERE THE ANCHORAGES MUST BE RECESSED IN CONCRETE IN ORDER TO RECEIVE THE REQUIRED MINIMUM CONCRETE COVER.

   C. ANCHORAGES WITH REUSABLE SPLIT GROMMETS SHALL BE USED AT CONSTRUCTION JOINTS WHERE TENDONS WILL BE STRESSED INTERMEDIATELY.

   D. ANCHORAGES WITH CUSTOM DESIGNED STEEL BEARING PLATES MAY BE USED FOR THE STRESSING END FOR BEAMS AND GIDERS.

   E. ANCHORAGES WITH SHOP PRE–SEATED WEDGES SHALL BE USED FOR ALL DEAD–END ANCHORAGES.

4. TENDON FABRICATION

   A. TENDONS WILL BE FABRICATED WITH SUFFICIENT LENGTH BEYOND THE EDGE FORM TO ALLOW STRESSING. A MINIMUM LENGTH OF 24 INCHES AT EACH STRESSING END IS REQUIRED.

   B. TENDONS THAT ARE STRESSED FROM ONE END ONLY SHALL HAVE DEAD–END ANCHORAGES ATTACHED TO ONE END PRIOR TO SHIPMENT. TENDONS THAT ARE STRESSED INTERMEDIATELY AT A CONSTRUCTION JOINT SHALL HAVE AN ANCHORAGE PLACED AT A PREDETERMINED DISTANCE ALONG THE TENDON PRIOR TO SHIPMENT.

   C. TENDONS SHALL BE CLEARLY IDENTIFIED BY COLOR CODE AS CALLED FOR ON THE PLACING DRAWINGS FOR EASY PLACEMENT.

   D. EACH TENDON SHIPMENT SHALL BE ACCOMPANIED BY A CUTTING LIST INDICATING THE THE NUMBER OF TENDONS, THEIR LENGTH, COLOR CODE AND TOTAL NUMBER OF ANCHORAGES, WEDGES, GROMMETS AND SUPPORT CHAIRS SHIPPED.

   E. TENDONS WILL BE FABRICATED IN SUCH SEQUENCE AND QUANTITY AS TO AVOID LENGTHY STORAGE AT THE JOBSITE.

   F. PURCHASER SHALL PROPERLY UNLOAD TENDON SHIPMENT UPON ARRIVAL. USE OF NYLON SLING IS RECOMMENDED TO PREVENT DAMAGE TO THE SHEATHING. PURCHASER SHALL SATISFACTORILY PROTECT TENDONS AT THE JOBSITE FROM CORROSION PRIOR TO PLACEMENT.

5. TENDON PLACEMENT

   A. TENDONS SHALL BE PLACED ACCORDING TO NUMBER AND SPACING AS SHOWN ON THE DRAWINGS. SLIGHT DEVIATION IN SPACING IS PERMITTED WHERE REQUIRED TO AVOID OPENINGS AND INSERTS WHICH ARE SPECIFICALLY LOCATED.

   B. WHERE TENDONS INTERFERE WITH EACH OTHER ONE TENDON MAY BE MOVED HORIZONTALLY IN ORDER TO AVOID THIS INTERFERENCE. WHERE THERE IS INTERFERENCE BETWEEN TENDONS AND ANY CONDUIT THE TENDON PROFILE GOVERNS.

   C. PLACEMENT OF MILD STEEL REINFORCEMENT SHALL BE COORDINATED WITH THE PLACEMENT OF POST TENSIONING TENDONS. PROPER TENDON PLACEMENT HAS PRIORITY.

   D. SUFFICIENT SUPPORT STEEL, SIZE AND SPACING AS INDICATED ON THE PLACING DRAWINGS, SHALL BE PROVIDED. THESE BARS ARE USED TO PREVENT LATERAL MOVEMENT OF THE TENDONS DURING CONCRETE PLACEMENT AND TO MAINTAIN, BY CHAIRING, THE PROPER PROFILE.

   E. TENDONS SHALL BE DRAPED TO APPROXIMATE A PARABOLIC PROFILE BETWEEN SUPPORTS AND SHALL CONFORM TO THE CONTROL POINTS SHOWN IN THE PROFILE DIMENSIONS ARE FROM THE SLAB BOTTOM TO THE CENTER OF GRAVITY OF THE TENDON OR GROUP OF TENDONS. LOW POINTS ARE MIDSPAN UNLESS OTHERWISE NOTED.

   F. ALL SUPPORT STEEL AND POST–TENSION TENDONS SHALL BE FIRMLY SECURED IN FORMS TO OBTAIN DIMENSIONS AND LOCATIONS SHOWN ON THE PLACING DRAWINGS.

   G. SUFFICIENT BAR CHAIRS SHALL BE PROVIDED AS REQUIRED TO HOLD THE TENDONS IN TRUE VERTICAL POSITION.

   H. ONE CONTINUOUS BAR SHALL BE PLACED ON THE TOP AND BOTTOM OF THE ANCHORAGES. SEE TYPICAL DETAILS FOR SIZE.

   I. IT SHALL BE THE PRESTRESSING STEEL PLACERS RESPONSIBILITY TO MAINTAIN ALIGNMENT OF THE TENDONS BEFORE, DURING AND AFTER CONCRETE PLACEMENT.

   J. TENDON PROFILE TOLERANCES: DEVIATIONS FROM TENDON DESIGN PROFILE SHALL BE A MAXIMUM OF 1/8" FOR MEMBER DEPTH LESS THAN OR EQUAL TO 8" AND 1/4" FOR MEMBER DEPTH GREATER THAN 8".

6. STRESSING PROCEDURE

   A. THE STRESSING OPERATION MUST BE UNDER THE IMMEDIATE CONTROL OF A PERSON EXPERIENCED IN THIS TYPE OF WORK. HE MUST EXERCISE CLOSE SUPERVISION AND KEEP RECORDS OF ALL OPERATIONS.

   B. THE STRESSING OPERATION SHALL NOT COMMENCE UNTIL CONCRETE TEST CYLINDERS, CURED UNDER JOBSITE CONDITIONS, HAVE BEEN TESTED AND INDICATE THAT THE CONCRETE IN THE MEMBER HAS ATTAINED THE STRENGTH CALLED FOR ON THE STRUCTURAL DRAWINGS.

   C. ALL PRESTRESSING STEEL SHALL BE STRESSED BY MEANS OF HYDRAULIC JACKS, EQUIPPED WITH ACCURATE READING AND CALIBRATED HYDRAULIC PRESSURE GAUGES. A CALIBRATION CHART SHALL ACCOMPANY EACH JACK.

   D. THE POST–TENSIONING OPERATION WILL BE SO CONDUCTED THAT ACCURATE ELONGATION OF THE PRESTRESSING STEEL CAN BE RECORDED AND COMPARED WITH COMPUTATIONS SUBMITTED TO THE STRUCTURAL ENGINEER.

   E. RECORDS SHALL BE KEPT OF ALL JACKING FORCES AND ELONGATIONS AND SUBMITTED PROMPTLY TO THE STRUCTURAL ENGINEER FOR REVIEW.

   F. THE MAXIMUM JACKING FORCE TO OVERCOME FRICTION SHALL NOT EXCEED 80% OF THE ULTIMATE FORCE OF THE TENDON. (41.3 x .80 = 33.0 KIPS)

   G. TENDONS SHALL BE ANCHORED AT A FORCE NOT TO EXCEED 70% OF THE ULTIMATE FORCE OF THE TENDON. (41.3 x .70 = 28.9 KIPS)

   H. THE STRESSING OPERATION PROCEEDS AS FOLLOWS:

      1. REMOVE GROMMETS AT THE STRESSING ENDS, CHECK INSIDE EACH GROMMET HOLE TO MAKE SURE THAT THE ANCHORAGES ARE FREE FROM CEMENT PASTE; IF NOT, REMOVE PASTE FROM ANCHORAGE WITH A SCREWDRIVER.
      2. INSERT WEDGES, SIDE BY SIDE, BY HAND INTO EACH ANCHORAGES.
      3. PUT A PAINT MARK ON EACH STRAND AT THE SLAB EDGE OR AT A FIXED DISTANCE FROM THE EDGE OF THE SLAB.
      4. STRESS THE STRAND TO OVERCOME FRICTION. (SEE NOTE "F" ABOVE)
      5. SEAT THE WEDGES IN THE ANCHORAGE USING THE HYDRAULIC SEATING DEVICE BUILT INTO THE RAM.
      6. REMOVE THE RAM.
      7. MEASURE AND RECORD FINAL ELONGATION, JACKING STRESS AND RAM AREA

   I. IF INCONSISTENCIES BETWEEN THE CALCULATED ELONGATION, THE MEASURED ELONGATION, AND THE JACK GAUGE READING OCCUR, THE JACK–GAUGE–PUMP UNIT SHALL BE RECALIBRATED. AN AGREEMENT OF WITHIN 5% SHALL BE SATISFACTORY. ANY INCONSISTENCY OVER 5% SHALL BE BROUGHT TO THE ATTENTION OF THE STRUCTURAL ENGINEER.

   J. TENDONS STRESSED FROM ONE END ONLY SHALL BE SO INDICATED ON THE PLACING DRAWINGS. TENDONS THAT ARE STRESSED FROM BOTH ENDS NEED NOT BE STRESSED FROM BOTH ENDS SIMULTANEOUSLY IF IT CAN BE SHOWN THAT THE WEDGES ON THE OPPOSITE END ARE PRE–SEATED AND CAUSE NO SLIPPAGE OF THE TENDON. THESE TENDONS MAY HAVE MORE ELONGATIONS AT ONE END THAN AT THE OPPOSITE END. ELONGATION FROM BOTH ENDS MUST TOTAL THE ELONGATION SHOWN ON THE PLACING DRAWINGS.

   K. TAKE SAFETY PRECAUTIONS AS NECESSARY: DO NOT PERMIT WORKMEN TO STAND BEHIND JACKS WHILE STRESSING TENDONS.

   L. TOTAL ELONGATION SHALL BE BASED UPON:
      $\frac{PL}{AE} = \frac{28.9\ (12)}{.153(28,500)}$ = .0795/INCHES PER FT. OF TENDON LENGTH.

7. STRESSING SEQUENCE

   A. BANDED SLAB:

      1. STRESS CONTINUOUS STRANDS IN THE UNIFORM DIRECTION.
      2. STRESS ADDED STRANDS IN THE UNIFORM DIRECTION.
      3. STRESS CONTINUOUS STRANDS IN THE BANDED DIRECTION.
      4. STRESS ADDED STRANDS IN THE BANDED DIRECTION.

8. SEALING ANCHORAGE BLOCKOUTS

   A. AFTER STRESSING IS COMPLETED AND WITH REVIEW OF THE ELONGATION RECORDS FROM THE STRUCTURAL ENGINEER, TENDONS SHALL BE CUT OR BURNED OFF TO WITHIN ONE INCH FROM THE SLAB EDGE.

   B. COAT STRESSING ANCHORAGE WITH CORROSION PREVENTIVE MATERIAL.

   C. EXPOSED STRESSING RECESS SHALL BE FILLED FLUSH WITH NON–SHRINK, NON–CORROSIVE GROUT. THIS WORK SHALL BE PERFORMED AS SOON AS PRACTICAL AFTER STRESSING BY THE CONTRACTOR. GROUT MIXTURES CONTAINING CHLORIDES, FLUORIDES, SULFATES OR NITRATES SHALL NOT BE USED.

9. MISCELLANEOUS

   A. ALL THE EQUIPMENT USED FOR HANDLING AND PLACING TENDONS SHALL BE SUCH THAT IT DOES NOT DAMAGE OR DETERIORATE THE PRESTRESSING STEEL OR THE ANCHORAGES.

   B. ALL INSERTS FOR SUSPENDED MECHANICAL AND ARCHITECTURAL WORK SHALL BE CAST IN PLACE. IF ADDITIONAL FASTENERS ARE REQUIRED, POWER DRIVEN FASTENERS WILL BE PERMITTED ONLY WHERE IT CAN BE SHOWN THAT THE INSERTS WILL NOT SPALL THE CONCRETE AND ARE LOCATED SO AS TO AVOID DAMAGING THE TENDONS.

   C. "DRILL STOPS" SHALL BE USED FOR ALL DRILLING.

   D. ALL POCKETS AND CLOSURE STRIPS REQUIRED FOR THE ANCHORAGES MUST BE ADEQUATELY REINFORCED SO AS NOT TO DECREASE THE STRENGTH OF THE STRUCTURE.

10. INSPECTION AND RECORDS

   A. THE GENERAL CONTRACTOR SHALL PROVIDE TO THE SPECIAL INSPECTOR REPORTS OF ALL POST TENSIONING WORK, SUCH AS THE FOLLOWING:

      1. COPIES OF SHOP DRAWINGS
      2. STRESSING LOGS (JACKING FORCES AND TENDON ELONGATIONS)
      3. RAM CALIBRATIONS

   B. RECORDS SHALL BE KEPT BY THE GENERAL CONTRACTOR OF ALL THE JACKING FORCES AND TENSION ELONGATION COPIES OF THE RECORDS SHALL BE PROMPTLY SUBMITTED TO THE ARCHITECT.

   C. THE SPECIAL INSPECTOR SHALL REVIEW ALL STRESSING RECORDS, RAM CALIBRATION INFO.; AND VERIFY IN WRITING THAT THE POST TENSION TENDONS HAVE BEEN STRESSED IN ACCORDANCE WITH THE CONSTRUCTION DOCUMENTS.

11. SHORING

   A. PRIOR TO STRESSING THE SLAB TENDONS, SUFFICIENT SHORES SHALL SUPPORT THE TOTAL WEIGHT OF THE SLAB, PLUS ALL CONSTRUCTION DEAD AND LIVE LOADS.

   B. ALL POST TENSIONING SLABS SHALL PROPERLY BE RE–SHORED IF THE FORMS ARE TO BE REMOVED IMMEDIATELY AFTER STRESSING.

12. SHOP DRAWINGS

   CONTRACTOR SHALL REVIEW POST–TENSION SHOP DRAWINGS PRIOR TO SUBMITTAL TO ARCHITECT. SHOP DWGS. SHALL CONSIST OF THE FOLLOWING:

   A. TENDON LAYOUT INCLUDING DRAPES AS WELL AS DIMENSIONS LOCATING TENDONS IN THE HORIZONTAL PLANE AT THE HIGH AND LOW POINTS. THE HORIZONTAL CURVATURE OF TENDONS AT BLOCKOUTS SHALL BE DETAILED. ALL OPENINGS IN SLABS SHALL BE SHOWN.

   B. TENDON PROFILES SHOWING CHAIR HEIGHTS AND LOCATIONS OF ANY PLACEMENT AS REQUIRED.

   C. DETAILS OF ANCHORAGE DEVICES, BLOCKOUT ASSEMBLY FORMWORK AND ALL OTHER PRESTRESSING REINFORCEMENT AROUND STRESSING POCKETS AND CLOSURES.

   D. PLACING OF ALL MILD STEEL CALLED FOR IN THE DRAWINGS FOR THE POST TENSIONED SLABS.

   E. REQUIRED ELONGATION OF EACH TENDON AT EACH JACKING POINT.

   F. COMPLETE PRESTRESSING PROCEDURE TO INCLUDE:

      1. JACKING FORCE AND JACKING PRESSURE.
      2. MAXIMUM TEMPORARY JACKING FORCE AND JACKING PRESSURE.
      3. CERTIFIED JACK CALIBRATION AND METHOD OF IDENTIFICATION OF JACK AND PUMP COMBINATION TO BE USED ON THE JOB.

AISE
ALLISON IDE
STRUCTURAL ENGINEERS LLC
900 Fort Street Mall Suite 1670
Honolulu, HI 96813-3717
808 536 2108
johnallison@allisonide.com

JOHN S. ALLISON
LICENSED PROFESSIONAL ENGINEER
No. 5933-S
HAWAII, U.S.A.
Signature
Expiration Date:

This work was prepared by me or under my supervision. Construction of this project will be under my observation. Observation as defined in Section 16–115–2 of Hawaii Administrative Rules 9–12–02 Title 16, Chapter 115, Professional Engineers, Architects, Surveyors, and Landscape Architects.

DEVELOPER:
CALIFORNIA INVESTMENT REGIONAL CENTER, LLC

PROJECT OWNER:
HAWAII CITY PLAZA, LP

Hawaii City Plaza
Honolulu, Hawaii
710 Sheridan Street
TMK 2-3-014: Parcels 002, 004, & 011

PERMIT
SET

DATE 2019 MARCH 19
AISE JOB No 17001.TD

1 2018 11-16	

SHEET TITLE
POST TENSION NOTES

SHEET NO.
S401

F:\2017 JOBS\17001.TD Hawaii City Plaza TOD March 11 2018 home\Working DWG March 11 2018\17001.TD S401-402 POST TENSION NOTES.dwg, 3/22/2019 1:27:09 PM, AutoCAD PDF (General Documentation).pc3

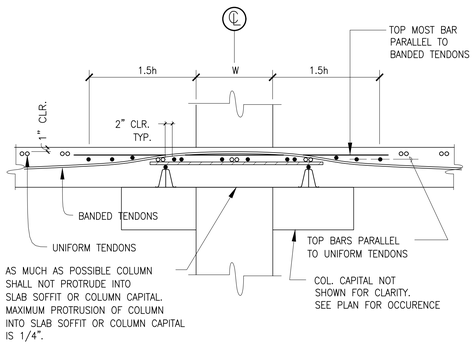

4 COLUMN SECTION

NOT TO SCALE

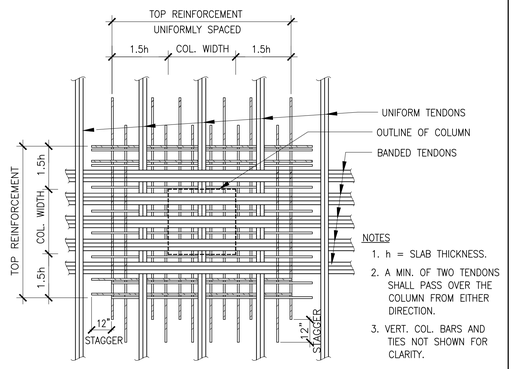

3 TOP REINFORCEMENT LAYOUT AT COLUMN

NOT TO SCALE

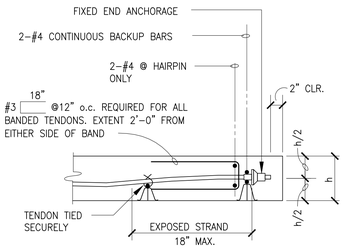

NOTE: ENCAPSULATED ANCHORS SHALL BE USED AT ALL LOCATIONS EXPOSED TO WEATHER. SEE DETAIL15/S403

2 TYP. FIXED END ANCHORAGE

NOT TO SCALE

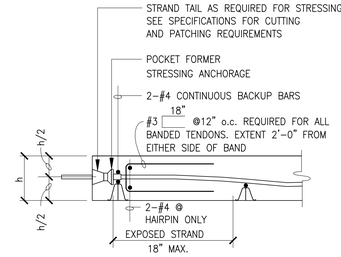

NOTE: ENCAPSULATED ANCHORS SHALL BE USED AT ALL LOCATIONS EXPOSED TO WEATHER. SEE DETAIL 15/S403

1 TYP. STRESSING ANCHORAGE

NOT TO SCALE

AISE
ALLISON IDE
STRUCTURAL ENGINEERS LLC
900 Fort Street Mall Suite 1670
Honolulu, HI 96813-3717
808 536 2108
johnallison@allisonide.com

JOHN S. ALLISON
LICENSED PROFESSIONAL ENGINEER
No. 5933-S
HAWAII, U.S.A.
Signature
Expiration Date

This work was prepared by me or under my supervision. Construction of this project will be under my observation. Observation as defined in Section 16-115-2, Hawaii Administrative Rules 3-12-02 Title 16, Chapter 115, Professional Engineers, Architects, Surveyors, and Landscape Architects.

DEVELOPER:
CALIFORNIA INVESTMENT REGIONAL CENTER, LLC

PROJECT OWNER:
HAWAII CITY PLAZA, LP

Hawaii City Plaza
Honolulu, Hawaii
710 Sheridan Street
TMK 2-3-014: Parcels 002, 004, & 011

PERMIT SET

DATE 2019 MARCH 19
AISE JOB No 17001.TD

1	2018 11-16	

SHEET TITLE
POST TENSION DETAILS

SHEET NO.
S402

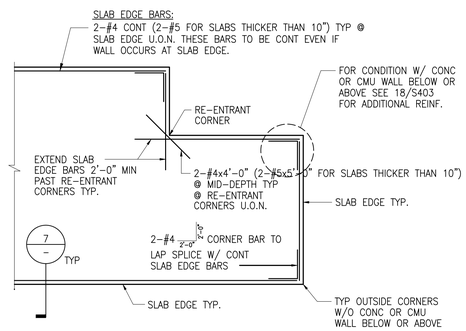

8 SLAB EDGE PLAN

NOT TO SCALE

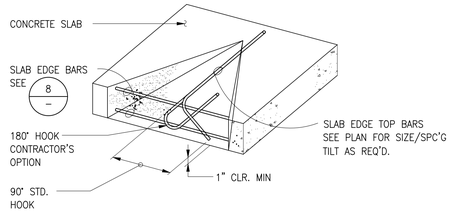

7 SLAB EDGE DETAIL

NOT TO SCALE

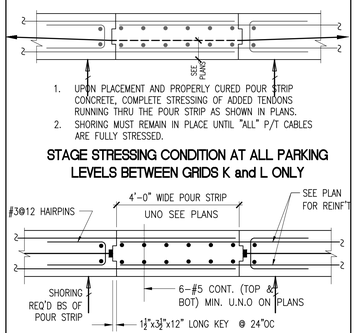

6 POUR STRIP IN POST TENSIONED SLAB

NOT TO SCALE

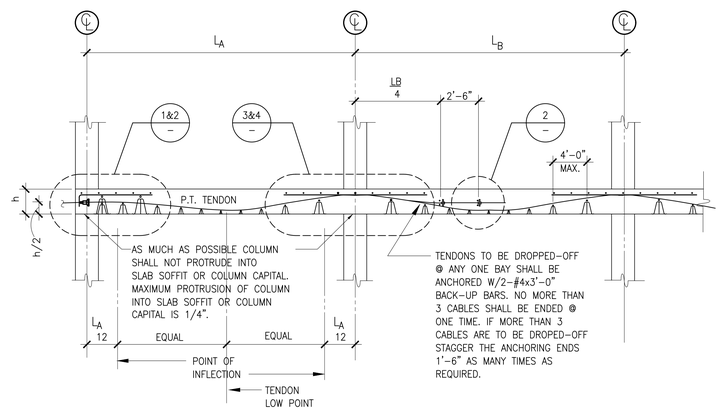

5 TENDON SUPPORT AND PLACING DETAIL

NOT TO SCALE

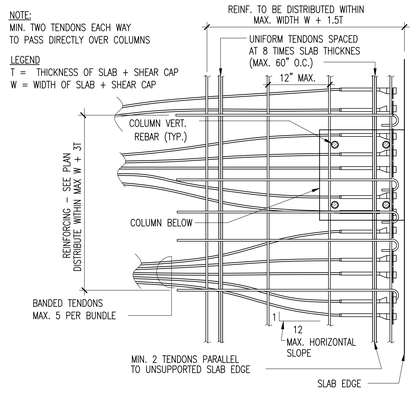

12 TENDON AT EXTERIOR COLUMN

NOT TO SCALE

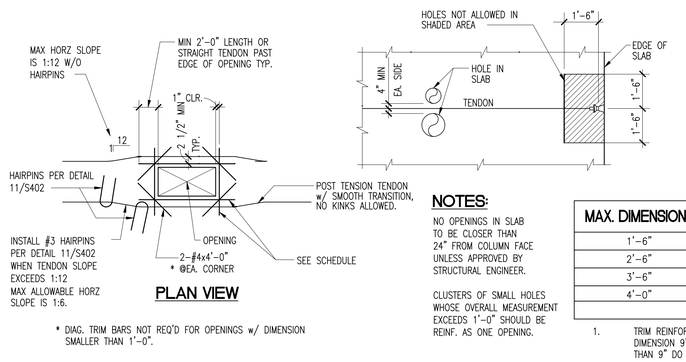

NOTES:

NO OPENINGS IN SLAB TO BE CLOSER THAN 24" FROM COLUMN FACE UNLESS APPROVED BY STRUCTURAL ENGINEER.

CLUSTERS OF SMALL HOLES WHOSE OVERALL MEASUREMENT EXCEEDS 1'–0" SHOULD BE REINF. AS ONE OPENING.

MAX. DIMENSION	TRIM REINFORCING
1'–6"	1– #4 TOP & BOTTOM EACH SIDE
2'–6"	2– #4 TOP & BOTTOM EACH SIDE
3'–6"	3– #5 TOP & BOTTOM EACH SIDE
4'–0"	3– #6 TOP & BOTTOM EACH SIDE

1. TRIM REINFORCING REQ'D FOR OPENINGS w/ ANY DIMENSION 9" OR LARGER. OPENINGS SMALLER THAN 9" DO NOT REQUIRE TRIM REINFORCING.

9 TYP. OPENING POST-TENSION SLAB DETAIL

NOT TO SCALE

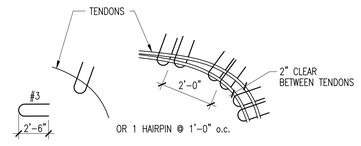

NOTE: INSTALL HAIRPINS WHERE CHANGE IN HORZ. SLOPE EXCEEDS 1:12 BUT LESS THAN 1:6. ABSOLUTE MAX ALLOWABLE HORZ SLOPE IS 1:6.

11 TYP. HAIRPIN DETAILS FOR CURVED TENDONS

NOT TO SCALE

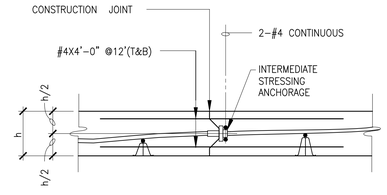

10 TYP. INTERMEDIATE ANCHORAGE

NOT TO SCALE

X:\2017 JOBS\17001.TD Hawaii City Plaza TOD March 11 2019\Arch\Working Dwg March 11 2019\17001.TD_S401-402 POST TENSION NOTES.dwg, 3/22/2019 12:15 PM, AutoCAD PDF (General Documentation).pc3

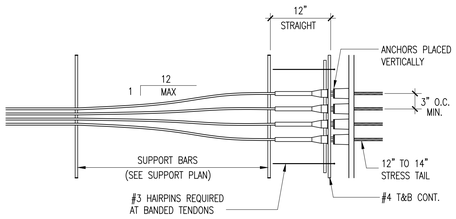

DETAIL A: (SLAB THICKNESS 7" OR GREATER)

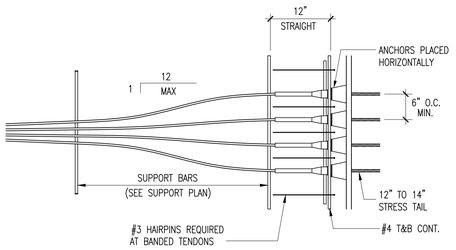

DETAIL B: (SLAB THICKNESS LESS THAN 7")

17 HORIZONTAL FLARE OF TENDONS AT ANCHORAGE ZONES

NOT TO SCALE

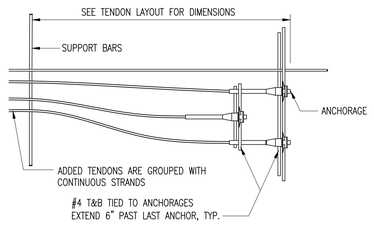

DETAIL A: PLAN VIEW

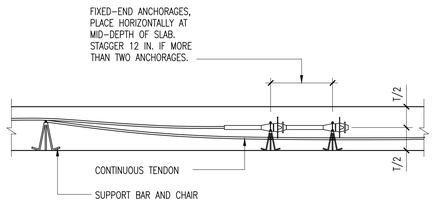

DETAIL B: ELEVATION VIEW

16 ADDED TENDONS

NOT TO SCALE

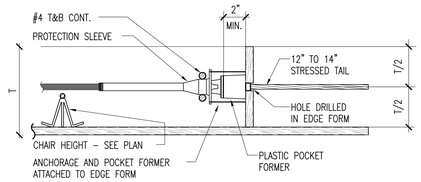

STRESSING END ANCHORAGE

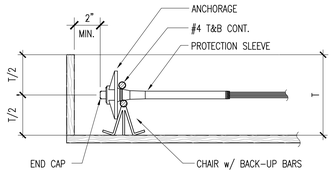

FIXED-END ANCHORAGE

NOTES:
- PLACE ANCHORS VERTICALLY IN SLABS GREATER THAN OR EQUAL TO 7 IN. THICK
- PLACE ANCHORS HORIZONTALLY IN SLABS LESS THAN 7 IN. THICK
- STRESS A MINIMUM OF 2 TENDONS ALONG SLAB EDGE PERPENDICULAR TO THE BANDED TENDONS BEFORE STRESSING THE BANDED TENDONS

15 UNIFORM TENDON ANCHORAGES

NOT TO SCALE

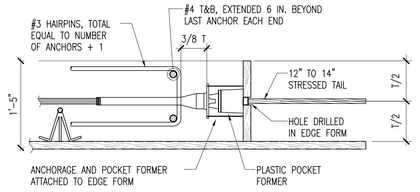

STRESSING END ANCHORAGE

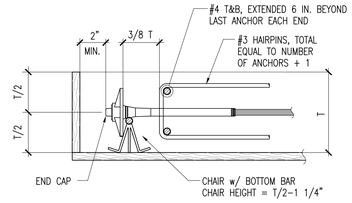

FIXED-END ANCHORAGE

NOTES:
- PLACE ANCHORS VERTICALLY IN SLABS GREATER THAN OR EQUAL TO 7 IN. THICK
- PLACE ANCHORS HORIZONTALLY IN SLABS LESS THAN 7 IN. THICK
- STRESS A MINIMUM OF 2 TENDONS ALONG SLAB EDGE PERPENDICULAR TO THE BANDED TENDONS BEFORE STRESSING THE BANDED TENDONS

14 BANDED TENDON ANCHORAGES

NOT TO SCALE

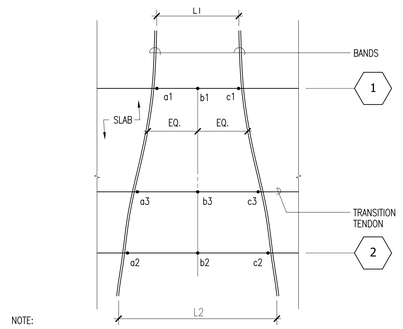

NOTE:
THE SPAN OF THE TRANSITION TENDON CHANGES FROM L1 AT LINE 1 TO L2 AT LINE 2.
PLACE TRANSITION TENDON W/ ITS CONTROL POINTS a3, b3 AND c3, EACH VARYING LINEARLY FROM 1 TO 2 BETWEEN THEIR RESPECTIVE VALUES AT 1 AND 2.

20 TENDON PLACEMENT IN SPANS OF VARYING LENGTH

NOT TO SCALE

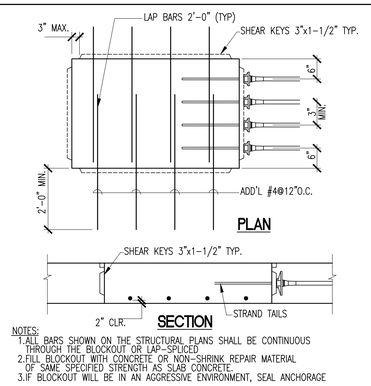

NOTES:
1. ALL BARS SHOWN ON THE STRUCTURAL PLANS SHALL BE CONTINUOUS THROUGH THE BLOCKOUT OR LAP-SPLICED
2. FILL BLOCKOUT WITH CONCRETE OR NON-SHRINK REPAIR MATERIAL OF SAME SPECIFIED STRENGTH AS SLAB CONCRETE.
3. IF BLOCKOUT WILL BE IN AN AGGRESSIVE ENVIRONMENT, SEAL ANCHORAGE

19 STRESSING BLOCKOUT

NOT TO SCALE

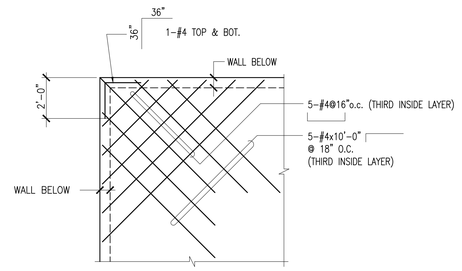

18 TRIM BARS @ SLAB EDGE CORNER WHERE WALL OCCURS BELOW OR ABOVE

NOT TO SCALE

AISE
ALLISON IDE
STRUCTURAL ENGINEERS LLC
900 Fort Street Mall Suite 1670
Honolulu, HI 96813-3717
808 536 2108
johnallison@allisonide.com

JOHN S. ALLISON
LICENSED PROFESSIONAL ENGINEER
No. 5933-S
HAWAII, U.S.A.
Signature
Expiration Date:

This work was prepared by me or under my supervision. Construction of this project will be under my observation. Observation as defined in Section 16-115-2, Hawaii Administrative Rules 8-12-02 Title 16, Chapter 115, Professional Engineers, Architects, Surveyors, and Landscape Architects.

DEVELOPER:
CALIFORNIA INVESTMENT REGIONAL CENTER, LLC

PROJECT OWNER:
HAWAII CITY PLAZA, LP

Hawaii City Plaza
Honolulu, Hawaii
710 Sheridan Street
TMK 2-3-014: Parcels 002, 004, & 011

PERMIT SET

DATE 2019 MARCH 19
AISE JOB No 17001.TD

1	2018 11-16	

SHEET TITLE
POST TENSION DETAILS

SHEET NO.
S403

C:\17 JOBS\17001.TD Hawaii City Plaza TOD Master 11-2018.rvtmp\Working DWG Mirror\11-2018\17001.TD_S403_POST TENSION DETAILS.dwg, 3/22/2019 12:22:22 PM, AutoCAD PDF (General Documentation).pc3

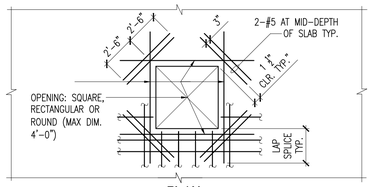

NOTES :

1. (*) ALL TOP AND BOTTOM SLAB BARS INTERRUPTED BY OPENING SHAL BE REPLACED BY ADDED REINFORCING EQUAL TO THAT INTERRUPTED.
   PLACE HALF OF THE ADDN'L REINFORCING ON EACH SIDE OF OPENING AND EXTEND LAP SPLICE OF INTERRUPTED BARS BEYOND OPENING. MIN. 2-#5 TOP & BOT. EA. SIDE OF OPENING.
2. BOXED OUT OPENINGS, BOXES RECESSES AND PIPE SLEEVE CLUSTERS SHALL BE TREATED AS FRAMED SLAB OPENINGS.
3. THIS DETAIL APPLIES TO HOLES 9" AND LARGER.
4. DIAG. TRIM BARS NOT REQ'D FOR HOLES 1'-4" AND SMALLER.

PLAN

4 REINFORCING AROUND STRUCTURAL SLABS OPENING (NON - PT SLABS)

SC: NONE

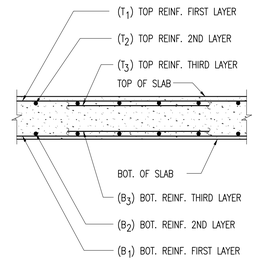

3 DETAIL - REBAR LAYERS IN SLAB CROSS SECTION

SC: NONE

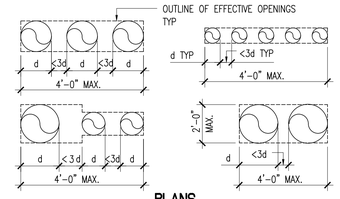

PLANS

NOTES:

1. ALL ABOVE CONDITIONS REQUIRE TRIM BARS ALL AROUND THE EFFECTIVE OPENING. SEE 1/S002 & 4/S003.

2 SLAB OPENINGS FOR MULTIPLE PIPES (PT AND NON - PT SLABS)

SC: NONE

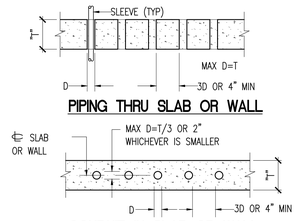

PIPING THRU SLAB OR WALL

CONDUIT IN SLAB OR WALL

NOTE: WHERE CLEAR DISTANCE BETWEEN SLEEVES IS IMPOSSIBLE OR MAX D IS EXCEEDED, THIS AREA SHALL BE TREATED AS AN OPENING PER TYPICAL DETAIL FOR OPENINGS IN SLAB OR WALL.

1 PIPING AND CONDUIT IN OR THRU. SLAB OR WALL

SC: NONE

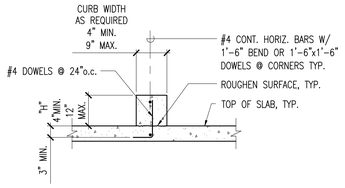

CURB

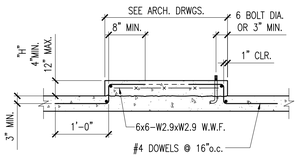

ISLAND

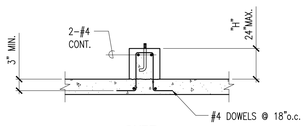

CURB

NOTES:

1. SEE ARCH. FOR SIZE AND LOCATION OF CURBS.
2. PROVIDE INSERTS AS REQUIRED BY ARCH. AND MECH. DRAWINGS.
3. SEE CURB DETAIL FOR #4 HORIZ. BAR REQUIREMENTS.
4. SEE EQUIPMENT DETAILS FOR ANCHORAGE.

8 CURBS , PADS, AND ISLANDS ON SUSPENDED FLOORS

SC: NONE

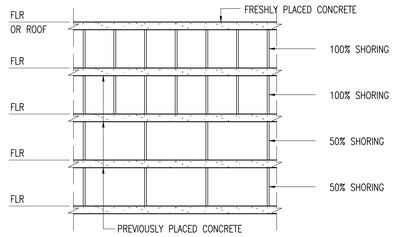

ELEVATION

NOTE: ALL SHORING AND RE-SHORING MUST BE DONE IN ACCORDANCE WITH ACI STANDARD RECOMMENDED PRACTICE FOR CONCRETE FORMWORK (ACI-347)
SHORES SHALL NOT BE REMOVED IF CONCRETE STRENGTH DOES NOT MEET SPECIFIED 28 DAY STRENGTH

7 MINIMUM SHORING OF SLABS AND BEAMS

SC: NONE

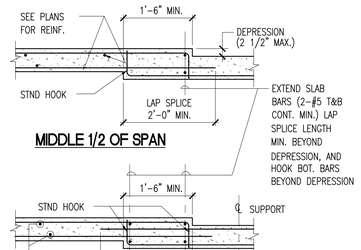

NEAR SUPPORT CENTERLINE

NOTE: DETAIL APPLIES TO PT AND NON-PT SLABS.

5 SLAB REINFORCING AT DEPRESSED SLAB

SC: NONE

ALLISON IDE
STRUCTURAL ENGINEERS LLC
900 Fort Street Mall Suite 1670
Honolulu, HI 96813-3717
808 536 2108
johnallison@allisonide.com

JOHN S. ALLISON
LICENSED PROFESSIONAL ENGINEER
No. 5933-S
HAWAII, U.S.A.
Signature
Expiration Date

This work was prepared by me or under my supervision. Construction of this project will be under my observation. Observation as defined in the Rules of Practice and Procedure, Administrative Rules 3-12-02 Title 16, Chapter 115, Professional Engineers, Architects, Surveyors, and Landscape Architects.

DEVELOPER:
CALIFORNIA INVESTMENT REGIONAL CENTER, LLC

PROJECT OWNER:
HAWAII CITY PLAZA, LP

Hawaii City Plaza
Honolulu, Hawaii
710 Sheridan Street
TMK 2-3-014: Parcels 002, 004, & 011

PERMIT SET

DATE 2019 MARCH 19
AISE JOB No 17001.TD

1 2018 11-16	

SHEET TITLE
POST TENSION DETAILS

SHEET NO.
S404

J:\2017_JOBS\17001.TD Hawaii City Plaza TOD Master 11 2018 Home\Working DWG Master 11 2018\17001.TD S404 POST TENSION DETAILS.dwg, 3/22/2019 1:27:32 PM, Adobe PDF, Contents: Documentation.pc3

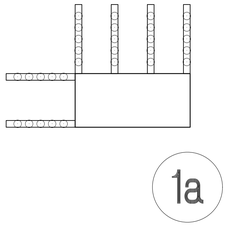

6 DECON STUDRAILS
W/ 5 STUDS 5/8"ø PER RAIL

1A SHEAR STUD 1A
SCALE : 3/4" = 1'-0"

GRAPHIC SCALE 0 6" 1'

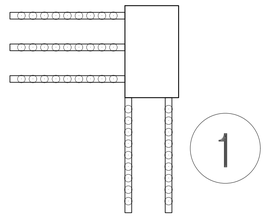

5 DECON STUDRAILS
W/ 9 STUDS 5/8"ø PER RAIL

1 SHEAR STUD 1
SCALE : 3/4" = 1'-0"

GRAPHIC SCALE 0 6" 1' 2'

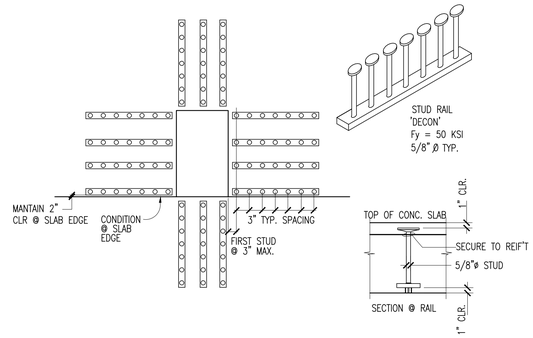

A TYPICAL SHEAR STUD RAIL AROUND COLUMN
SCALE : 3/4" = 1'-0"

GRAPHIC SCALE 0 6" 1'

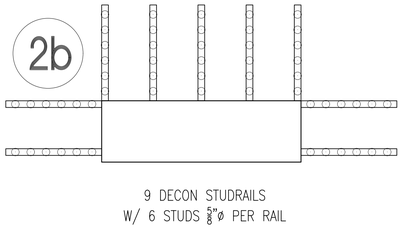

9 DECON STUDRAILS
W/ 6 STUDS 5/8"ø PER RAIL

2B SHEAR STUD 2B
SCALE : 3/4" = 1'-0"

GRAPHIC SCALE 0 6" 1' 2'

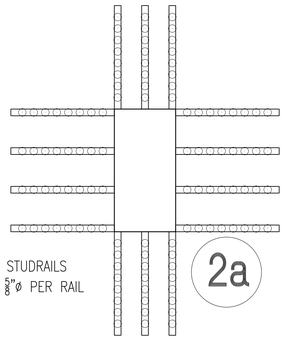

14 DECON STUDRAILS
W/ 8 STUDS 5/8"ø PER RAIL

2A SHEAR STUD 2A
SCALE : 3/4" = 1'-0"

GRAPHIC SCALE 0 6" 1' 2'

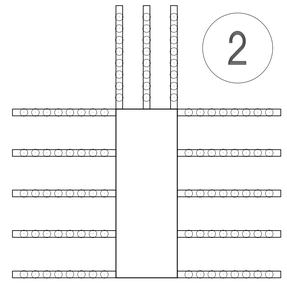

13 DECON STUDRAILS
W/ 8 STUDS 5/8"ø PER RAIL

2 SHEAR STUD 2
SCALE : 3/4" = 1'-0"

GRAPHIC SCALE 0 6" 1' 2'

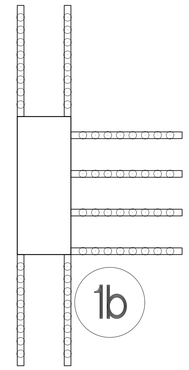

8 DECON STUDRAILS
W/ 8 STUDS 5/8"ø PER RAIL

1B SHEAR STUD 1B
SCALE : 3/4" = 1'-0"

GRAPHIC SCALE 0 6" 1' 2'

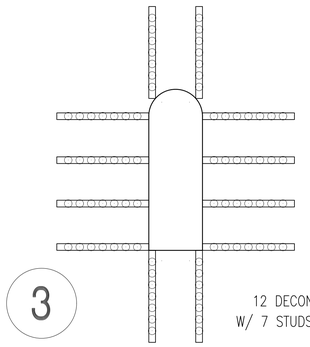

12 DECON STUDRAILS
W/ 7 STUDS 5/8"ø PER RAIL

3 SHEAR STUD 3
SCALE : 3/4" = 1'-0"

GRAPHIC SCALE 0 6" 1' 2'

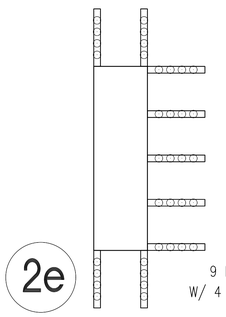

9 DECON STUDRAILS
W/ 4 STUDS 5/8"ø PER RAIL

2E SHEAR STUD 2E
SCALE : 3/4" = 1'-0"

GRAPHIC SCALE 0 6" 1' 2'

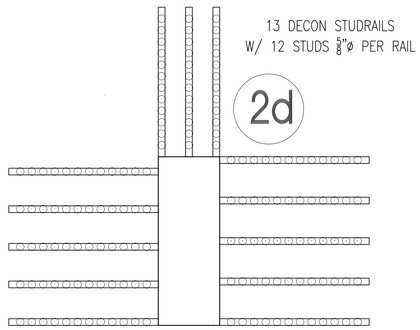

13 DECON STUDRAILS
W/ 12 STUDS 5/8"ø PER RAIL

2D SHEAR STUD 2D
SCALE : 3/4" = 1'-0"

GRAPHIC SCALE 0 6" 1' 2'

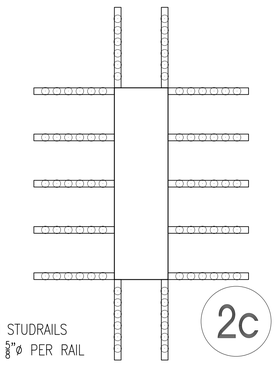

14 DECON STUDRAILS
W/ 6 STUDS 5/8"ø PER RAIL

2C SHEAR STUD 2C
SCALE : 1/2" = 1'-0"

GRAPHIC SCALE 0 6" 1' 2'

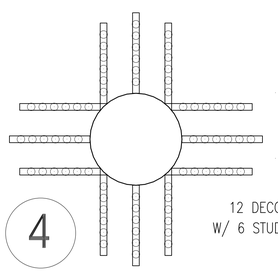

12 DECON STUDRAILS
W/ 6 STUDS 5/8"ø PER RAIL

4 SHEAR STUD 4
SCALE : 3/4" = 1'-0"

GRAPHIC SCALE 0 6" 1' 2'

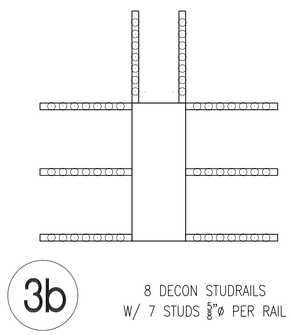

8 DECON STUDRAILS
W/ 7 STUDS 5/8"ø PER RAIL

3B SHEAR STUD 3B
SCALE : 3/4" = 1'-0"

GRAPHIC SCALE 0 6" 1' 2'

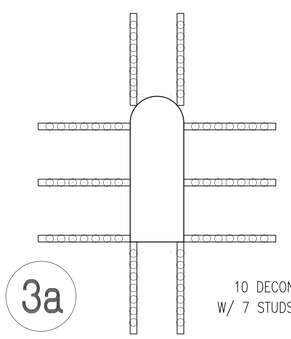

10 DECON STUDRAILS
W/ 7 STUDS 5/8"ø PER RAIL

3A SHEAR STUD 3A
SCALE : 3/4" = 1'-0"

GRAPHIC SCALE 0 6" 1' 2'

ALLISON IDE
STRUCTURAL ENGINEERS LLC
900 Fort Street Mall Suite 1670
Honolulu, HI 96813-3717
808 536 2108
johnallison@allisonide.com

JOHN S. ALLISON
LICENSED PROFESSIONAL ENGINEER
No. 5933-S
HAWAII, U.S.A.

Signature
Expiration Date:

This work was prepared by me or under my supervision. Construction of this project will be under my observation. Observation as defined in Section 16-115-2 of the Hawaii Administrative Rules 3-12-02 Title 16, Chapter 115, Professional Engineers, Architects, Surveyors, and Landscape Architects.

DEVELOPER:
CALIFORNIA INVESTMENT REGIONAL CENTER, LLC

PROJECT OWNER:
HAWAII CITY PLAZA, LP

Hawaii City Plaza
Honolulu, Hawaii
710 Sheridan Street
TMK 2-3-014: Parcels 002, 004, & 011

PERMIT SET

DATE 2019 MARCH 19
AISE JOB No 17001.TD

1	2018 11-16	

SHEET TITLE
STUDRAIL DETAILS

SHEET NO.
S405

L:\17 JOBS\17001.10 Hawaii City Plaza\100 Master\11 2018 Items\Working DWG Mirror\17001.10 S405 STUDRAIL.dwg, 3/22/2019 1:27:42 PM, AutoCAD PDF (General Documentation).pc3

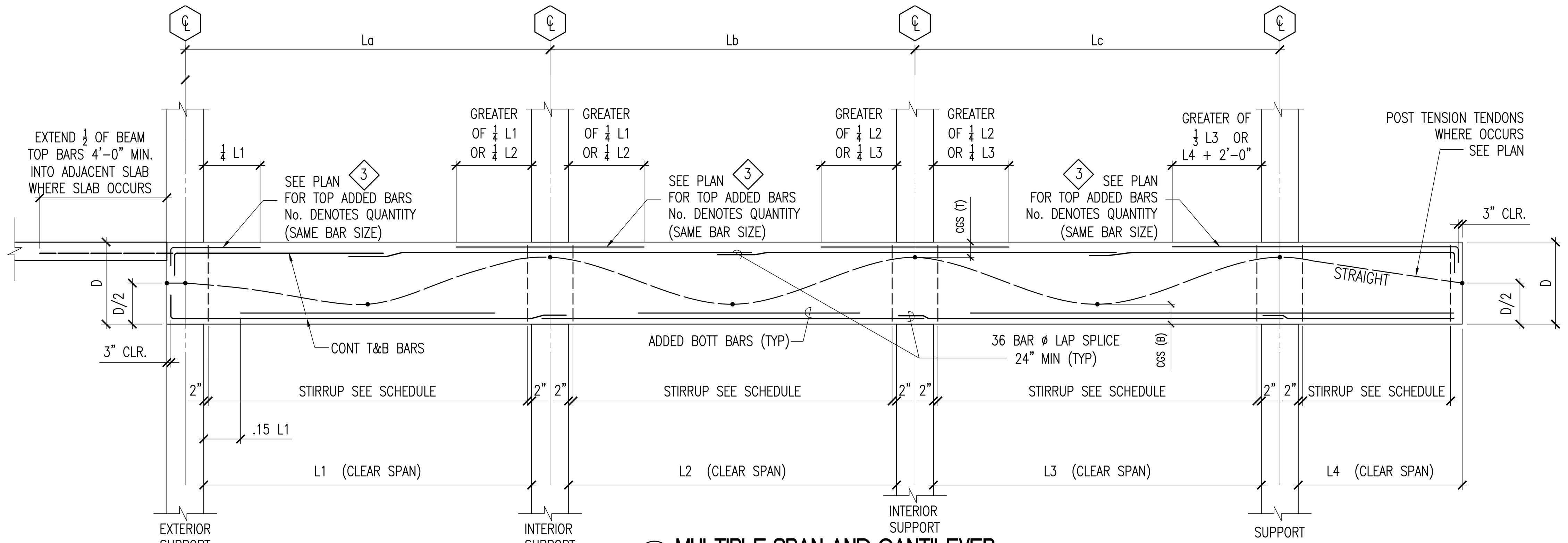

1A MULTIPLE SPAN AND CANTILEVER

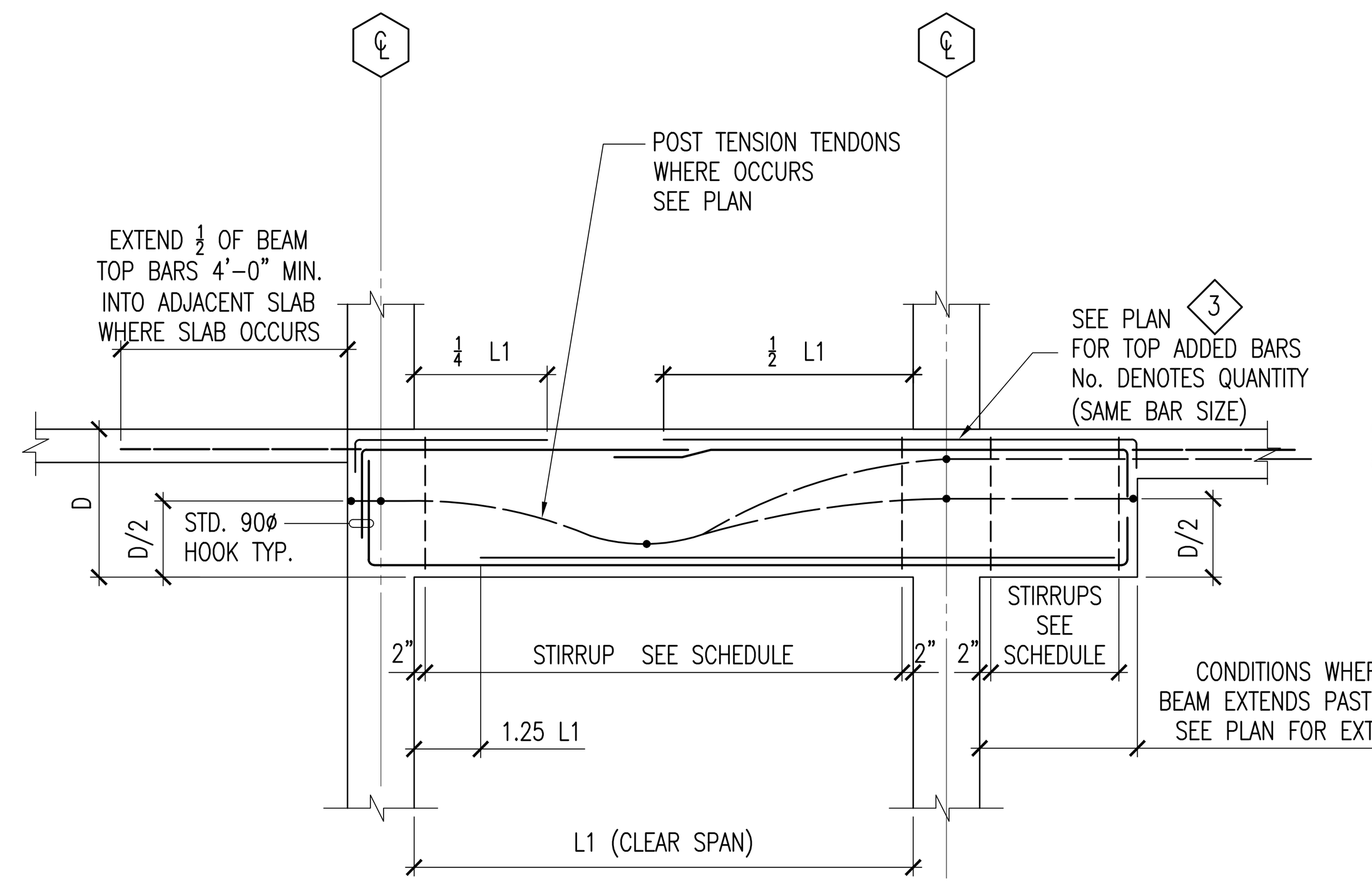

1B SINGLE SPAN

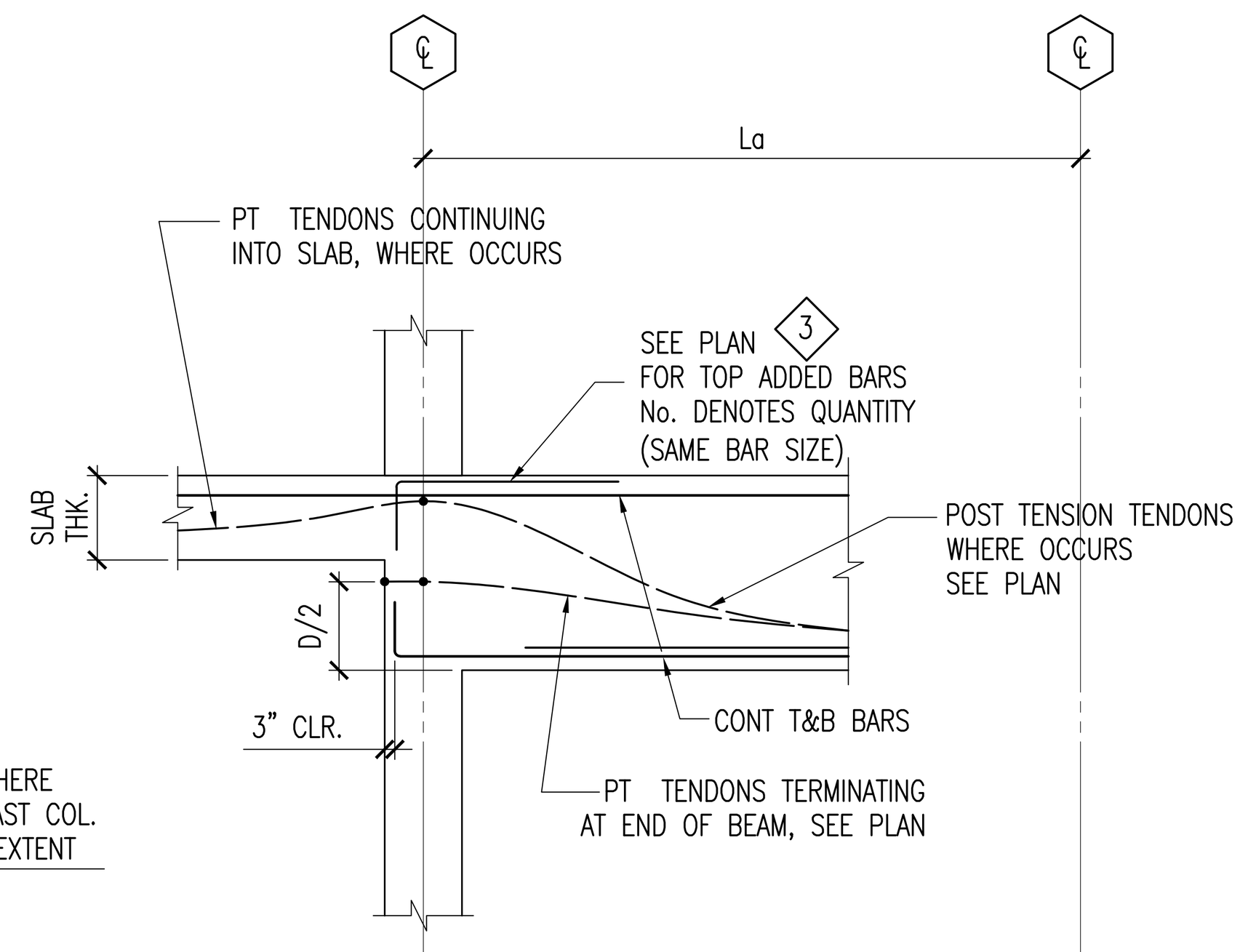

1C CONDITION AT CONTINUOUS SLAB

1 TYPICAL BEAM REINFORCING ELEVATION

NOT TO SCALE

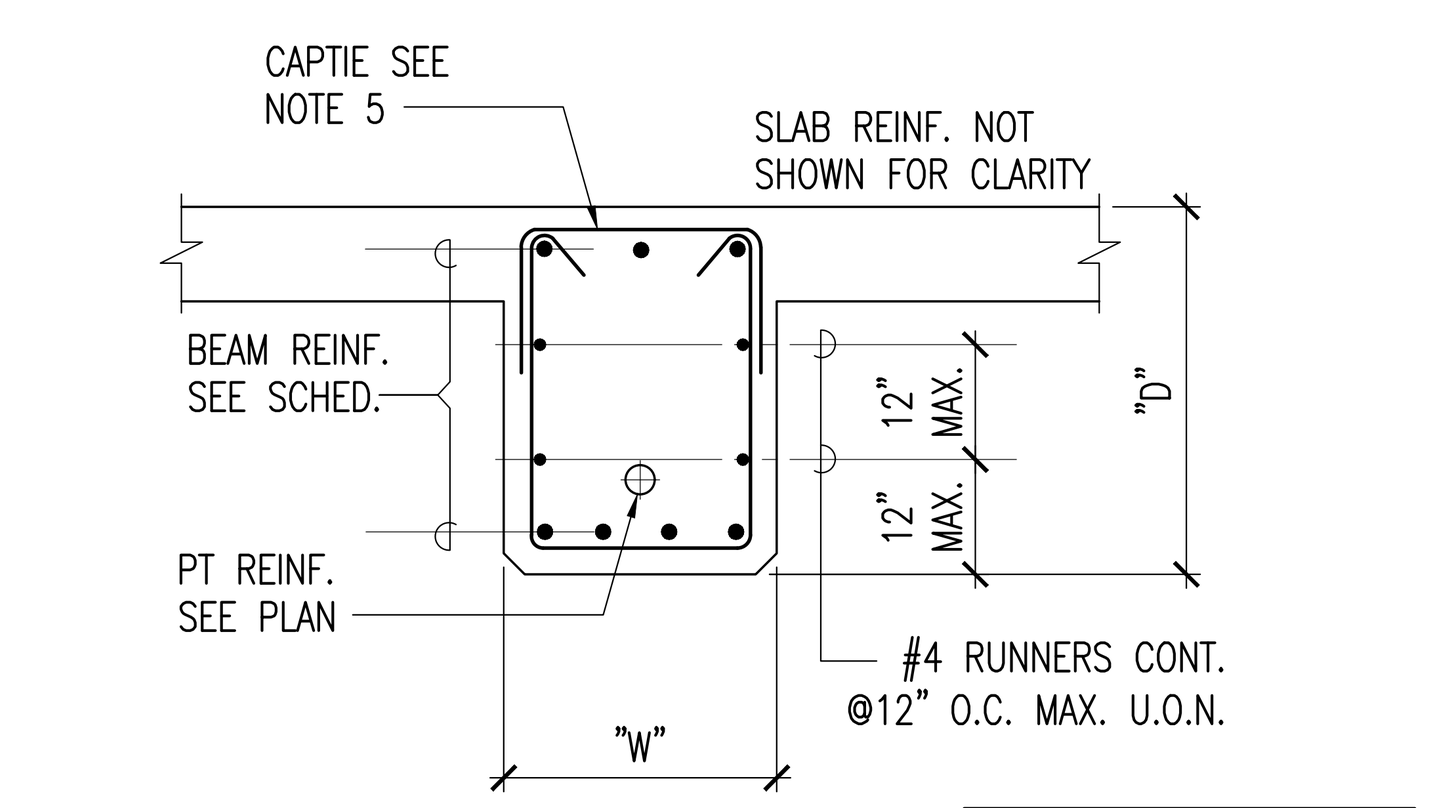

INTERIOR BEAM (TYPE 1A)

NOTE: SEE TYPE 2A FOR CLEAR COVER CRITERIA

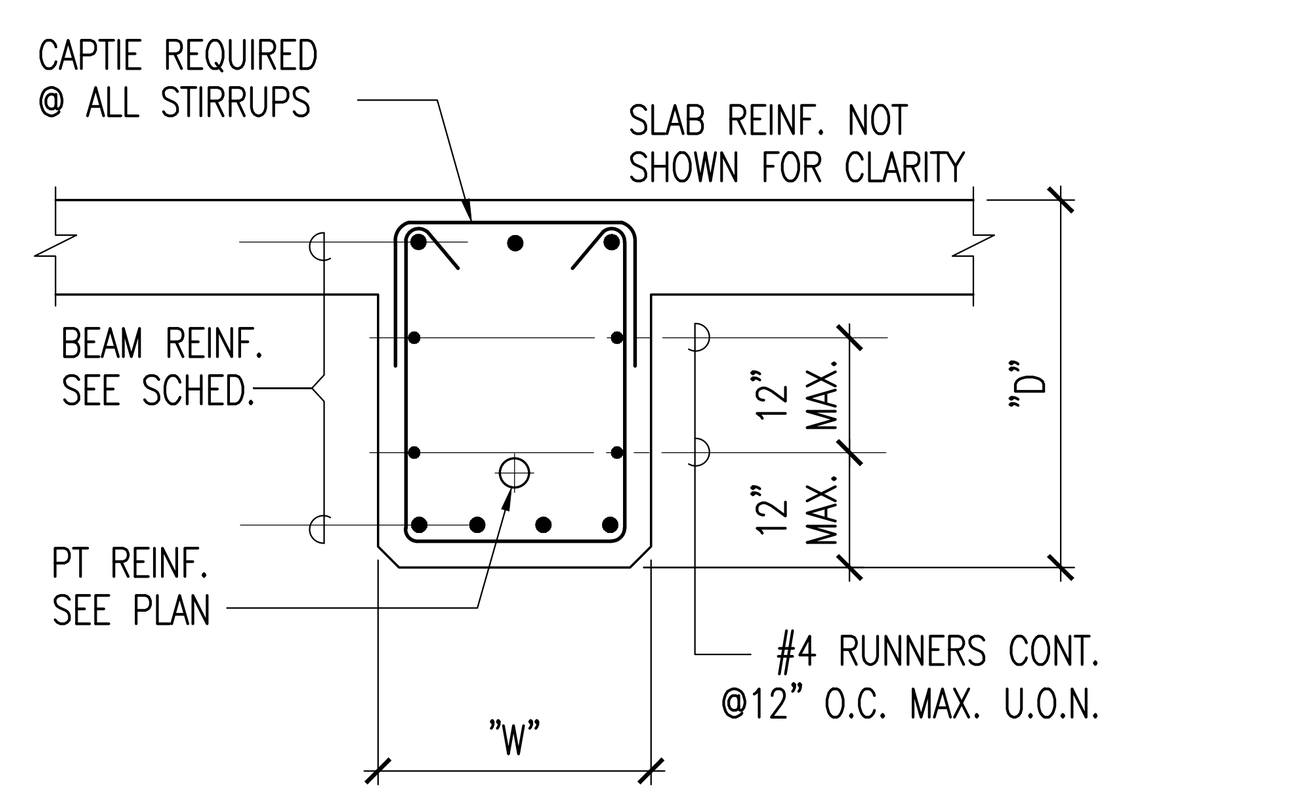

INTERIOR BEAM (TYPE 1B)

NOTE: SEE TYPE 2A FOR CLEAR COVER CRITERIA

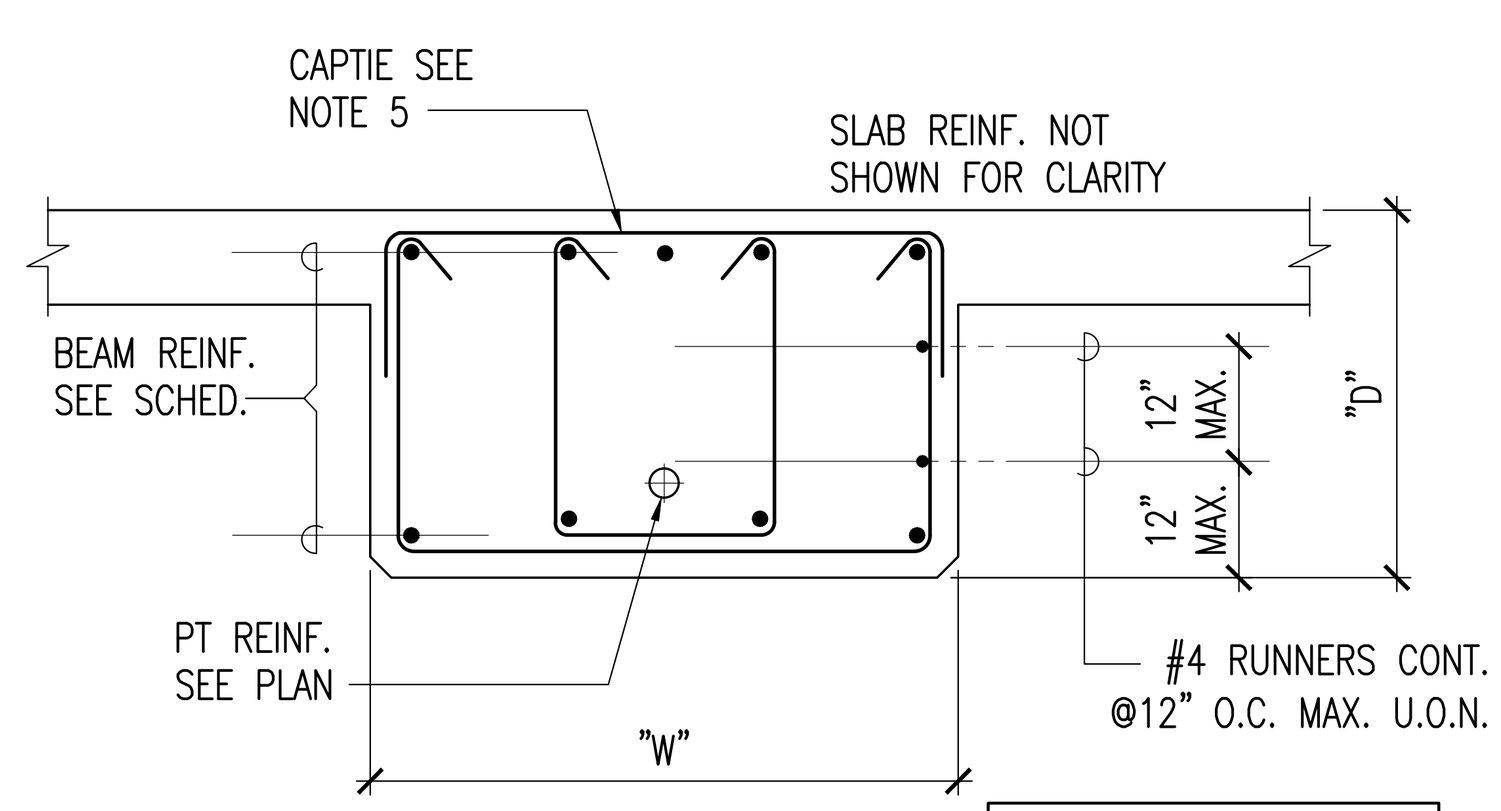

INTERIOR BEAM (TYPE 1C)

NOTE: SEE TYPE 2A FOR CLEAR COVER CRITERIA

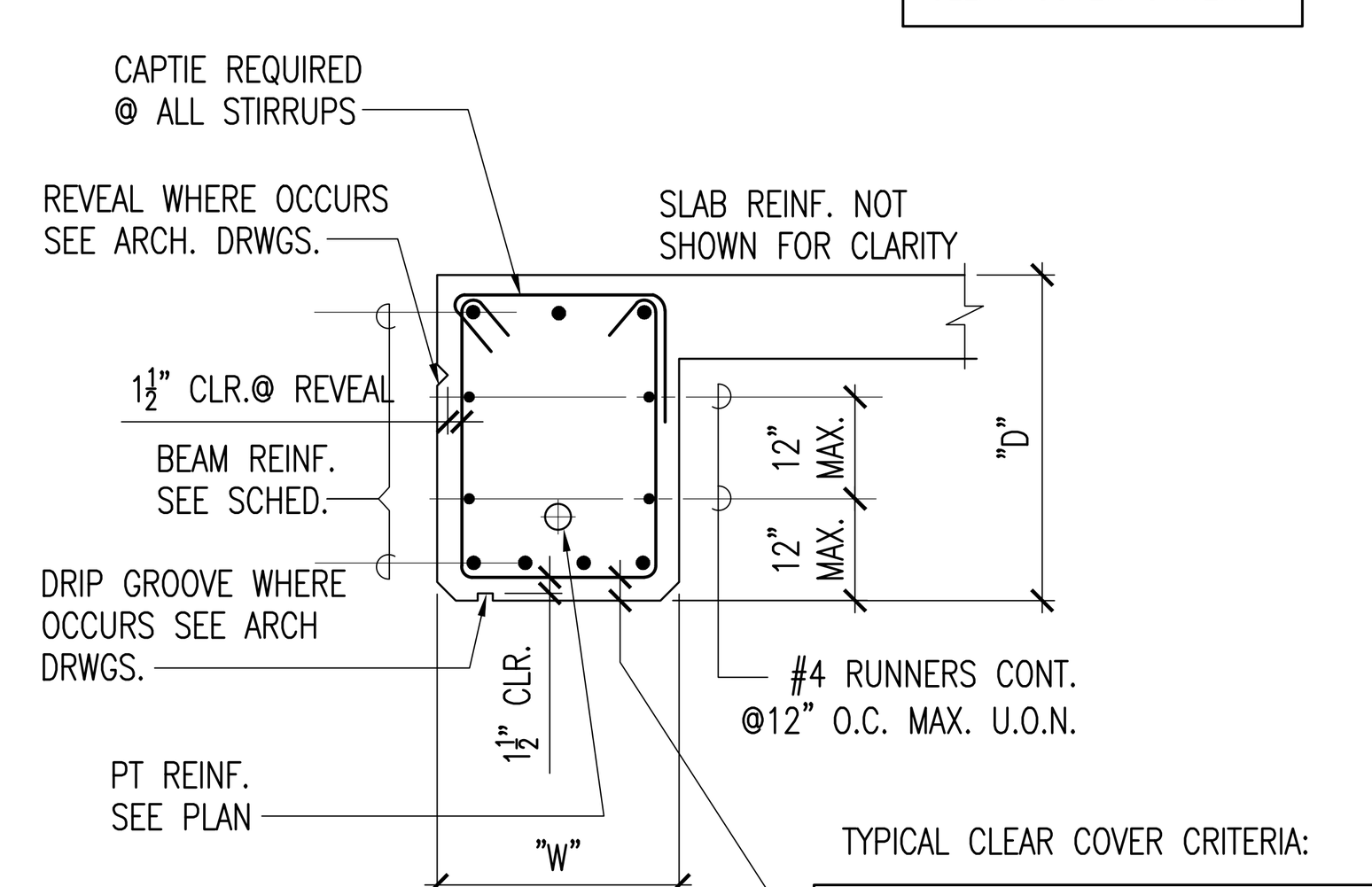

TYPICAL CLEAR COVER CRITERIA:

- 1½" CLR. INTERIOR EXPOSURE FOR SIDES, TOP BOTTOM, TYP U.O.N.
- 2" CLR. AT ANY FACES EXPOSED TO WEATHER.
- 1½"+ DEPTH OF DRIP GROOVE OR REVEAL WHERE OCCURS.

EDGE BEAM (TYPE 2A)

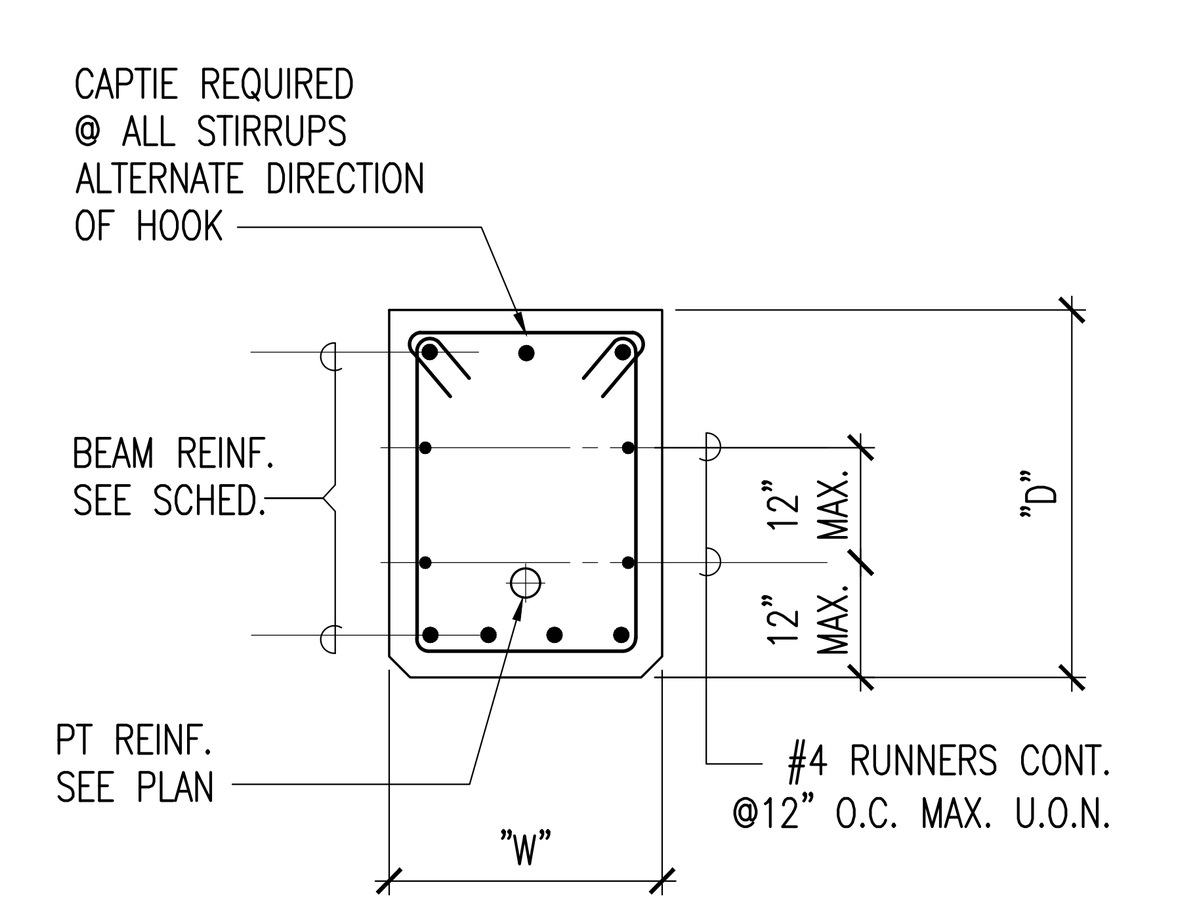

BEAM W/O SLAB (TYPE 3A)

NOTE: SEE TYPE 2A FOR CLEAR COVER CRITERIA

2 TYPICAL BEAM SECTIONS - STIRRUPS TYPES

NOT TO SCALE

PB – POST TENSION BEAM
B – BAND BEAM
BM – MILD STEEL REINFORCED BEAM
UB – DESIGNATES UPTURN BEAM
HB – DESIGNATES HEADER BEAM

BEAM MARK	SIZE W x D (INCHES)	REINFORCEMENT: TOP BARS CONTINUOUS	BOTTOM BARS: CONTINUOUS BOTTOM BARS	ADDED BOTTOM BARS	STIRRUPS	REMARKS
PBR-1	48x14	2-#9	2-#9	2-#9	8@8",8@10"BAL @ 12"	
PBR-2	(VARY)x14	2-#9	2-#9	2-#9	8@8",8@10"BAL @ 12"	SEE PLAN FOR BM. WIDTH
PBR-3	36x14	2-#9	2-#9	1-#9	8@8",8@10"BAL @ 12"	
PBR-4	36x14	2-#9	2-#9	1-#9	8@8",8@10"BAL @ 12"	
PBR-5	72x14	2-#9	2-#9	1-#9	8@8",8@10"BAL @ 12"	
PBR-6	30x14	2-#9	2-#9	3-#9	8@8",8@10"BAL @ 12"	
PBR-7	30x14	2-#9	2-#9	2-#9	8@8",8@10"BAL @ 12"	
PBR-8	30x14	2-#9	2-#9	4-#9	8@8",8@10"BAL @ 12"	
PBR-9	30x14	2-#9	2-#9	4-#9	8@8",8@10"BAL @ 12"	
PBR-10	30x14	2-#9	2-#9	4-#9	8@8",8@10"BAL @ 12"	
PBR-11	30x14	2-#9	2-#9	4-#9	8@8",8@10"BAL @ 12"	
PBR-12	30x14	2-#9	2-#9	4-#9	8@8",8@10"BAL @ 12"	
PBR-13	30x14	2-#9	2-#9	4-#9	8@8",8@10"BAL @ 12"	
PBR-14	30x14	2-#9	2-#9	4-#9	8@8",8@10"BAL @ 12"	
PBR-15	30x14	2-#9	2-#9	4-#9	8@8",8@10"BAL @ 12"	
PBR-16	48x14	2-#9	2-#9	2-#9	8@8",8@10"BAL @ 12"	
PBR-17	48x14	2-#9	2-#9	4-#9	8@8",8@10"BAL @ 12"	
PBR-18	24x14	2-#9	2-#9	2-#9	8@8",8@10"BAL @ 12"	
PBR-19	30x14	2-#9	2-#9	4-#9	8@6",8@10"BAL @ 12"	
PB-1	48x20	3-#9	3-#9	2-#9	10#4@4",10#4@8"BAL @ 12"	
PB-2	48x20	3-#9	3-#9	4-#9	10#4@4",10#4@8"BAL @ 12"	
PB-3	48x20	3-#9	3-#9	4-#9	10#4@4",10#4@8"BAL @ 12"	
PB-4	30x20	3-#9	3-#9	2-#9	10#4@4",10#4@8"BAL @ 12"	
PB-5	30x20	3-#9	4-#9	4-#9	10#4@4",10#4@8"BAL @ 12"	
PB-6	30x20	6-#9	3-#9	1-#9	#4@4",BAL @ 8"	
PB-7	30x20	6-#9	3-#9	1-#9	10#4@4",BAL @ 8"	
PB-8	18x20	3-#9	3-#9	1-#9	10@4",10@8"BAL @ 12"	
PB-9	18x20	3-#9	4-#9	3-#9	10@4",10@8"BAL @ 12"	
PB-10	18x18	3-#9	4-#9	3-#9	10@4",10@8"BAL @ 12"	
PB-11	18x18	3-#9	4-#9	4-#9	10@4",10@8"BAL @ 12"	
PB-12	18x18	3-#9	4-#9	2-#9	10@4",10@8"BAL @ 12"	
PB-13	18x18	3-#9	4-#9	2-#9	10@4",10@8"BAL @ 12"	
PB-14	12x36	3-#9	2-#9	2-#9	6#4@4",6#4@8"BAL @ 12"	
PB-15	12x36	3-#9	4-#9	4-#9	6#4@4",6#4@8"BAL @ 12"	
PB-16	42x18	3-#9	4-#9	1-#9	10#4@4",10#4@8"BAL @ 12"	
PB-17	48x20	3-#9	3-#9	1-#9	#4@4",BAL @ 8"	
PB-18	30x20	3-#9	3-#9	4-#9	10#4@4",10#4@8"BAL @ 12"	
PB-19	36x20	3-#9	3-#9	4-#9	10#4@4",10#4@8"BAL @ 12"	
PB-20	36x20	3-#9	3-#9	4-#9	10#4@4",10#4@8"BAL @ 12"	
PB-21	36x20	3-#9	3-#9	4-#9	10#4@4",10#4@8"BAL @ 12"	
PB-22	36x20	3-#9	3-#9	4-#9	10#4@4",10#4@8"BAL @ 12"	
PB-23	36x20	3-#9	3-#9	3-#9	10#4@4",10#4@8"BAL @ 12"	
PB-24	18x24	2-#9	2-#9		10#4@4",10#4@8"BAL @ 12"	
PB-25	18x24	2-#9	2-#9		10#4@4",10#4@8"BAL @ 12"	
PB-26	18x18	3-#9	3-#9	1-#9	10#4@4",10#4@8"BAL @ 12"	

A CONCRETE BEAM SCHEDULE

NOTE: SEE PLANS FOR POST TENSION REINFORCING

PB – POST TENSION BEAM
B – BAND BEAM
BM – MILD STEEL REINFORCED BEAM
UB – DESIGNATES UPTURN BEAM
HB – DESIGNATES HEADER BEAM

BEAM MARK	SIZE W x D (INCHES)	REINFORCEMENT: TOP BARS CONTINUOUS	BOTTOM BARS: CONTINUOUS BOTTOM BARS	ADDED BOTTOM BARS	STIRRUPS	REMARKS
B-1	24x20	4-#9	5-#9		6@4", 4@8" BAL @12"	
B-2	18x20	4-#9	4-#9		6@4", 4@8" BAL @12"	
B-3	36x20	4-#9	4-#9		6@4", 4@8" BAL @12"	
B-4	18x20	2-#9	4-#9		6@4", 4@8" BAL @12"	
B-5	18x24	2-#9	4-#9		6@4", 4@8" BAL @12"	
B-6	18x24	2-#9	4-#9		6@4", 4@8" BAL @12"	
B-7	16x68	4-#9	6-#9		6@4", 4@8" BAL @12"	
B-8A	24x20	5-#9	4-#9	2-#9	6@4", 4@8" BAL @12"	
B-8B	24x20	5-#9	4-#9	4-#9	6@4", 4@8" BAL @12"	
B-9	18x24	2-#9	4-#9		6@4", 4@8" BAL @12"	
B-10	20x20	4-#9	4-#9	2-#9	6@4", 4@8" BAL @12"	
B-11	20x20	5-#9	4-#9	2-#9	6@4", 4@8" BAL @12"	
B-12	20x24	2-#9	4-#9		6@4", 4@8" BAL @12"	
B-13	24x20	6-#9	2-#9	2-#9	6#4@4",10#4@8"BAL @ 12"	TOP BAR CONT. THUR. B-13&B14
B-14	24x20	6-#9	2-#9	---	6#4@4",BAL @ 6"	TOP BAR CONT. THUR. B-13&B14

1. PB-XX DESIGNATES BEAMS CALLED OUT ON FRAMING PLANS. SEE SCHEDULE FOR APPROPRIATE DIMENSIONS AND MILD STEEL REINFORCEMENT. SEE PLANS FOR ADDED TOP STEEL AND REBARS & POST TENSION REINFORCING.
2. BARS #8 AND SMALLER SHALL BE PLACED IN AS FEW LAYERS AS POSSIBLE WITH 1" CLEARANCE BETWEEN LAYERS AND 1" CLEARANCE BETWEEN BARS IN THE SAME LAYER UNLESS OTHERWISE NOTED. FOR BARS LARGER THAN #8's USE ONE BAR DIAMETER SPACING FOR THESE CLEARANCE. SEE 4/S502.
3. WHERE THE NUMBER OF TOP CONTINUOUS OR TOP ADDED BARS CHANGES AT A SUPPORT, THE LARGER NUMBER SHALL EXTEND BEYOND THE SUPPORT INTO THE ADJACENT BEAM THE SAME DISTANCE AS THE TOP ADDED BARS AT THAT SUPPORT.
4. THE FIRST STIRRUP SHALL BE PLACED 2 INCHES FROM THE FACE OF SUPPORT. IF BEAM IS 12" WIDER THAN SUPPORTING COLUMN RUN STIRRUPS CONTINUOUS OVER SUPPORT AT SAME SPACING ADJACENT TO SUPPORT.
5. ALL STIRRUPS SHALL BE CLOSED AS INDICATED ON DETAIL 2/S501.
6. ALL BEAMS SHALL BE POURED MONOLITHICALLY FROM SOFFIT OF BEAM TO TOP OF THE BEAM.
7. SPLICES OF THE TOP AND BOTTOM CONT. SHALL BE IN ACCORDANCE TO THE BEAM REINFORCING ELEVATION SHOWN, HOWEVER THE BARS MAY NOT NEED TO BE SPLICED AT EVERY SPAN. RUN BARS CONTINUOUS AS LONG AS POSSIBLE: HOWEVER DO NOT RUN BARS CONTINUOUS THROUGH POUR STRIPS.
8. REINFORCING SHOWN ON BEAM SCHEDULE SHEETS CALL OUT MAIN REINFORCING SHOWN IN BEAMS. SEE 2/S501 FOR HORIZ. RUNNER BARS U.O.N.
9. SEE 3/S003 & 6/S003 FOR BEAM BAR SPLICE DETAILS AND STIRRUPS BENDS.
10. CAMBER NON PT BEAMS AS PER SCHEDULE.
11. SEE ARCH. DRAWINGS FOR REVEALS, DRIP GROOVES, ETC.
12. BEAM DEPTH IS FROM TOP OF CONCRETE FLOOR TO BEAM SOFFIT AND DOES NOT INCLUDE THICKNESS OF ARCH. FLOOR FINISHES.
13. UPTURN BEAMS TO BE POURED MONOLITHIC WITH FLOOR SLAB, UNLESS OTHERWISE NOTED.
14. MECH. PENETRATIONS SHALL BE LOCATED AT MIDDLE 1/3 SPAN AND AT BEAM MID-DEPTH AND SHALL NOT INTERRUPT MAIN REINF. ANY MODIFICATIONS SHALL BE SUBJECT TO THE APPROVAL OF THE STRUCTURAL ENGINEER.

B NOTES BEAM SCHEDULE

NOTE: SEE PLANS FOR POST TENSION REINFORCING

AISE
ALLISON IDE
STRUCTURAL ENGINEERS LLC
900 Fort Street Mall Suite 1670
Honolulu, HI 96813-3717
808 536 2108
johnallison@allisonide.com

JOHN S. ALLISON
LICENSED PROFESSIONAL ENGINEER
No. 5933-S
HAWAII, U.S.A.

Signature
Expiration Date:

This work was prepared by me or under my supervision. Construction of this project will be under my observation. Observation as defined in Section 16-115-2 of Hawaii Administrative Rules 9-12-02 Title 16, Chapter 115, Professional Engineers, Architects, Surveyors, and Landscape Architects.

DEVELOPER:
CALIFORNIA INVESTMENT REGIONAL CENTER, LLC

PROJECT OWNER:
HAWAII CITY PLAZA, LP

Hawaii City Plaza
Honolulu, Hawaii
710 Sheridan Street
TMK 2-3-014: Parcels 002, 004, & 011

PERMIT SET

DATE 2019 MARCH 19
AISE JOB No 17001.TD

1 2018 11-16

SHEET TITLE

CONCRETE BEAM SCHEDULE AND DETAILS

SHEET NO.

S501

F:\2017 JOBS\17001.TD Hawaii City Plaza TOD March 11 2018 home\Working DWG March 11 2018\17001.TD S501 Conc Bm Sched and Det.dwg, 3/22/2019 1:27:51 PM, AutoCAD PDF (General Documentation).pc3

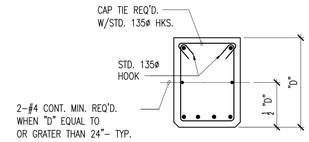

NOTE:
SIMILAR CLEAR COVER
WHEN 'D' EQUAL TO
SHOWN ON

2 BEAM SECTION WITHOUT SLAB
NOT TO SCALE

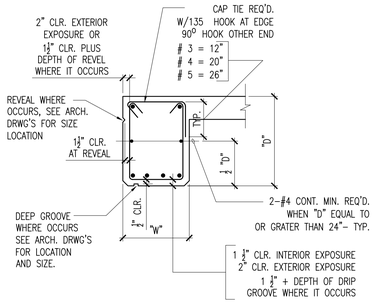

1 TYP. EDGE BEAM SECTION
NOT TO SCALE

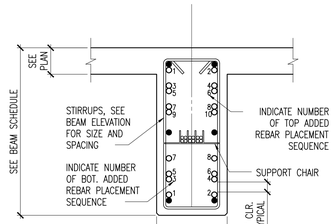

PLACEMENT OF LONGITUDINAL REBAR
IN POST TENSION BEAMS

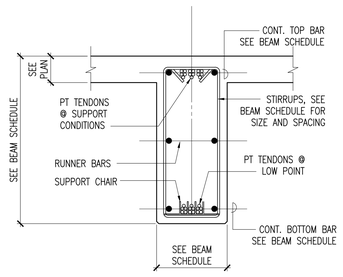

NOTE:
1. KEEP TENDON GROUPS UNIFORMLY
SPACED THROUGHOUT THE LENGTH OF BEAM

PLACEMENT OF LONGITUDINAL REBAR
IN POST TENSION BEAMS

5 PT AND REBAR PLACEMENT IN POST TENSION BEAMS
NOT TO SCALE

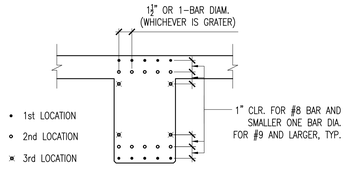

NOTE:
ALL BARS SHALL BE PLACED AS SHOWN 1ST LOCATION
WHERE CLEARANCES PERMIT. ADDITIONAL REINFORCING
TO BE PLACED IN 2ND LOCATION WHERE CLEARANCES
PERMIT. USE 3RD LOCATION ONLY WHEN OTHER LOCATONS
ARE FULL.

4 LONGITUDINAL BAR PLACEMENT
NOT TO SCALE

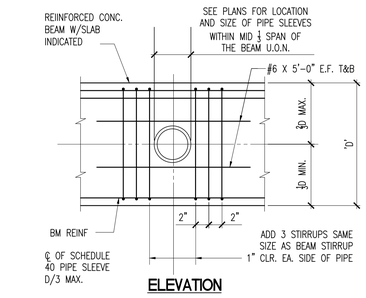

ELEVATION

NOTE: PENETRATIONS THRU BEAMS ARE PERMITED ONLY
WITH THE REVIEW OF THE STRUCTURAL ENGINEER

7 PIPE SLEEVE THROUGH CONCRETE BEAM
NOT TO SCALE

NOTE:
A & B DIMENSIONS ARE TAKEN
FROM TANGENT PORTION OF BAR
BEND SEE S000

A	B	
4" FOR #3	12" FOR #3	NOTE:
4 1/2" FOR #4	16" FOR #4	USE CLOSED OR CAPPED STIRRUP
5 1/2" FOR #5	20" FOR #5	W/2–135ø HOOKS IF LAP LENGTH
7 3/4" FOR #6	24" FOR #6	IS TOO LONG FOR DEPTH OF BEAM

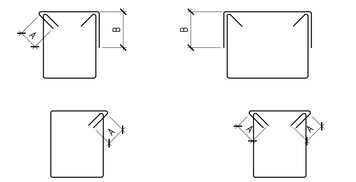

3 CLOSED AND CAPPED STIRRUP DETAIL
NOT TO SCALE

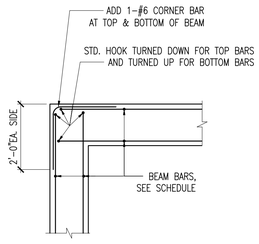

6 BEAM CORNER DETAIL
NOT TO SCALE

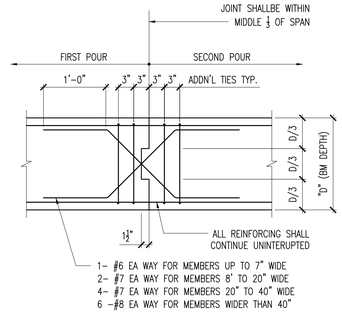

8 CONCRETE BEAM AND GIRDER CONSTRUCTION JOINT
NOT TO SCALE

AISE
ALLISON IDE
STRUCTURAL ENGINEERS LLC
900 Fort Street Mall Suite 1670
Honolulu, HI 96813-3717
808 536 2108
johnallison@allisonide.com

JOHN S. ALLISON
LICENSED
PROFESSIONAL
ENGINEER
No. 5933-S
HAWAII, U.S.A.
Signature
Expiration Date

This work was prepared by me or under my supervision. Construction of this project will be under my observation. Observation as defined in Section 16-115-2, Hawaii Revised Administrative Rules 3–12–02 Title 16, Chapter 115, Professional Engineers, Architects, Surveyors, and Landscape Architects.

DEVELOPER:
CALIFORNIA INVESTMENT
REGIONAL CENTER, LLC

PROJECT OWNER:
HAWAII CITY PLAZA, LP

Hawaii City Plaza
Honolulu, Hawaii
710 Sheridan Street
TMK 2-3-014: Parcels 002, 004, & 011

PERMIT
SET

DATE 2019 MARCH 19
AISE JOB No 17001.TD

1	2018 11-16	

SHEET TITLE
CONCRETE BEAM
DETAILS

SHEET NO.
S502

C:\2017 JOBS\17001.TD Hawaii City Plaza TOD March 11, 2018 Items Working FWG March 11, 2018\17001.TD S502 Conc Bm Details.dwg, 3/22/2019 12:19:57 PM, AutoCAD P25 (General Documentation).pc3

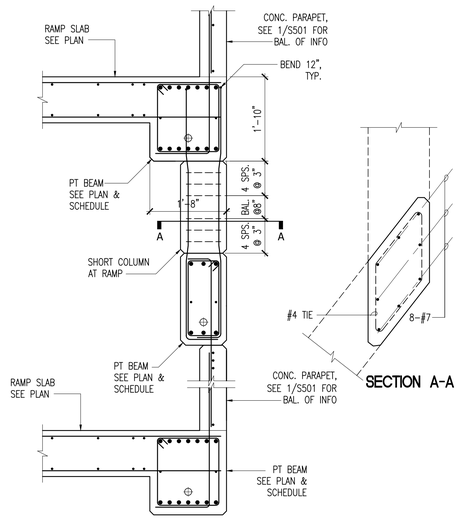

4 BEAM SECTION
SCALE : 3/4" = 1'-0"
GRAPHIC SCALE 0 6" 1' 2'

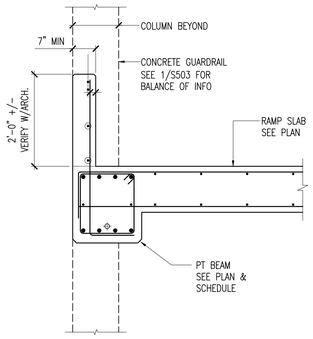

3 BEAM SECTION
SCALE : 3/4" = 1'-0"
GRAPHIC SCALE 0 6" 1' 2'

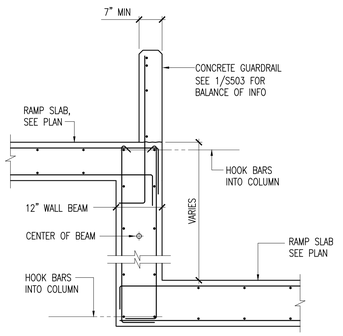

2 BEAM SECTION AT RAMP
SCALE : 3/4" = 1'-0"
GRAPHIC SCALE 0 6" 1' 2'

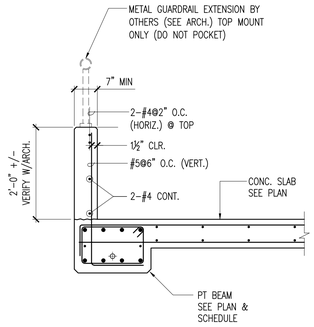

NOTES:
1. PROVIDE 1" MIN. VERTICAL GAP BETWEEN GUARDRAIL AND WALL/COLUMN.
2. PROVIDE VERTICAL INSCRIBE EXTERIOR JOINT AT 4'-0" TO 5'-0" SPACING VERIFY WITH ARCH.

1 TYPICAL GUARDRAIL SECTION
SCALE : 3/4" = 1'-0"
GRAPHIC SCALE 0 6" 1' 2'

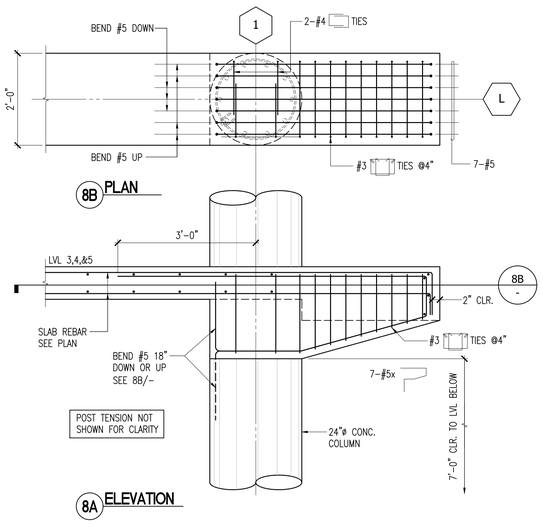

8 CORBEL BEAM SECTION AT LEVELS 3, 4 AND 5
SCALE : 3/4" = 1'-0"
GRAPHIC SCALE 0 6" 1' 2'

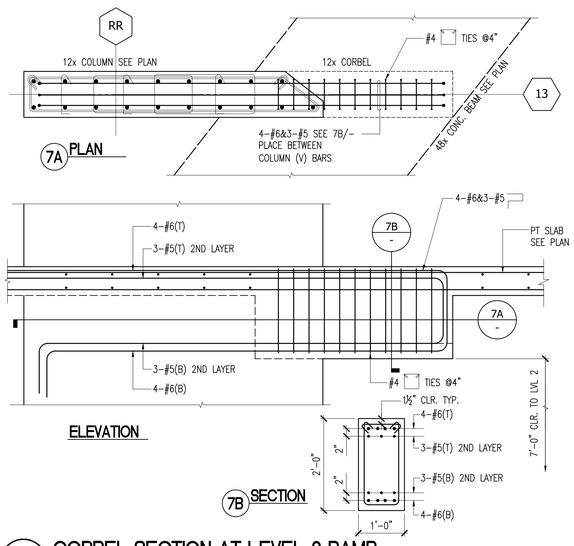

7 CORBEL SECTION AT LEVEL 2 RAMP
SCALE : 3/4" = 1'-0"
GRAPHIC SCALE 0 6" 1' 2'

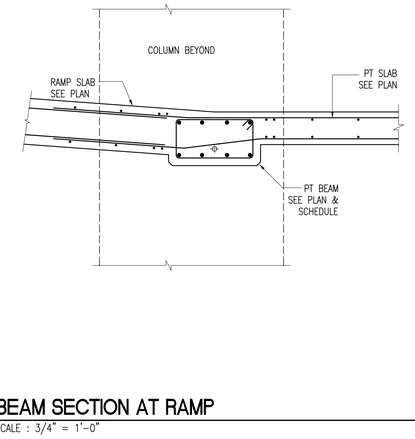

6 BEAM SECTION AT RAMP
SCALE : 3/4" = 1'-0"
GRAPHIC SCALE 0 6" 1' 2'

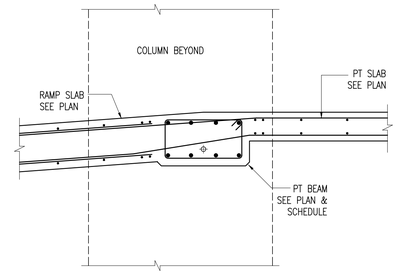

5 BEAM SECTION AT RAMP
SCALE : 3/4" = 1'-0"
GRAPHIC SCALE 0 6" 1' 2'

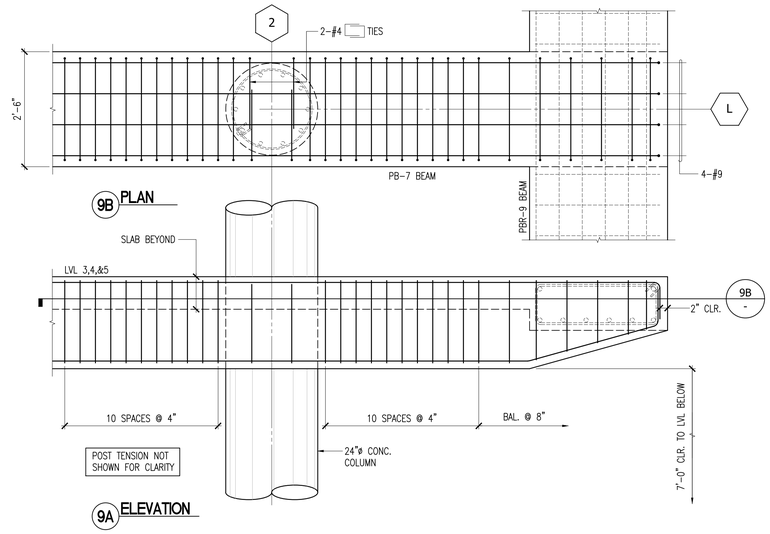

9 CORBEL BEAM SECTION AT LEVELS 3, 4 AND 5
SCALE : 3/4" = 1'-0"
GRAPHIC SCALE 0 6" 1' 2'

AISE
ALLISON IDE
STRUCTURAL ENGINEERS LLC
900 Fort Street Mall Suite 1670
Honolulu, HI 96813-3717
808 536 2108
johnallison@allisonide.com

JOHN S. ALLISON
LICENSED PROFESSIONAL ENGINEER
No. 5933-S
HAWAII, U.S.A.
Signature
Expiration Date

This work was prepared by me or under my supervision. Construction of this project will be under my observation. Observation as defined in Hawaii Title 16, Department of Administrative Rules 3-12-02 Title 16, Chapter 115, Professional Engineers, Architects, Surveyors, and Landscape Architects.

DEVELOPER:
CALIFORNIA INVESTMENT REGIONAL CENTER, LLC

PROJECT OWNER:
HAWAII CITY PLAZA, LP

Hawaii City Plaza
Honolulu, Hawaii
710 Sheridan Street
TMK 2-3-014: Parcels 002, 004, & 011

PERMIT SET

DATE 2019 MARCH 19
AISE JOB No 17001.TD

1	2018 11-16		

SHEET TITLE
CONCRETE BEAM DETAILS

SHEET NO.
S503

J:\2017_JOBS\17001.TD Hawaii City Plaza TOD March 11 2018\Home\Working DWG March 11 2018\17001.TD S503 Corbel Beam Details.dwg, 3/22/2019 1:28:07 PM, AutoCAD PDF (General Documentation).pc3

TOWER COLUMN SCHEDULE

	COL. MARK	CT-1	CT-2	CT-3	CT-4	CT-5	CT-6	CT-7	CT-8	CT-9	CT-10	CT-11	CT-12	CT-13	CT-14	CONCRETE STRENGTH
LEVEL 26	SIZE REINFORCING COLUMN TYPE															f'c = 4,000 PSI fy = 75 KSI
LEVEL 25	SIZE REINFORCING COLUMN TYPE															
LEVEL 24	SIZE REINFORCING COLUMN TYPE															
LEVEL 23	SIZE REINFORCING COLUMN TYPE															
LEVEL 22	SIZE REINFORCING COLUMN TYPE															
LEVEL 21	SIZE REINFORCING COLUMN TYPE															
LEVEL 20	SIZE REINFORCING COLUMN TYPE															
LEVEL 19	SIZE REINFORCING COLUMN TYPE															
LEVEL 18	SIZE REINFORCING COLUMN TYPE															
LEVEL 17	SIZE REINFORCING COLUMN TYPE															
LEVEL 16	SIZE REINFORCING TYP. TIES COLUMN TYPE	14x24 6#8 "U"	14x30 6#8 "U"	14x30 6#8 "U"	14x44 10#8 "C"	14x36 12#8 "F"	14x50 18#8 "N"	16x24 8#8 "A"	14x32 14#8 "I"	16x32 12#8 "G"	16x42 18#8 "N"	14x24 8#8 #3@12 "B"	14x48 12#8 #3@12 "F"	12x96 20#8 "O"	16x32 10#8 "D"	
LEVEL 15	SIZE REINFORCING COLUMN TYPE															f'c = 6,000 PSI fy = 75 KSI
LEVEL 14	SIZE REINFORCING COLUMN TYPE															
LEVEL 13	SIZE REINFORCING COLUMN TYPE															
LEVEL 12	SIZE REINFORCING COLUMN TYPE															
LEVEL 11	SIZE REINFORCING COLUMN TYPE															
LEVEL 10	SIZE REINFORCING COLUMN TYPE															
LEVEL 9	SIZE REINFORCING COLUMN TYPE															
LEVEL 8	SIZE REINFORCING COLUMN TYPE															
LEVEL 7	SIZE REINFORCING COLUMN TYPE															f'c = 8,000 PSI fy = 75 KSI
LEVEL 6 (PODIUM)	SIZE REINFORCING TYP. TIES COLUMN TYPE	14x24 6#8 "U"	14x30 6#8 "U"	14x30 6#8 "U"	14x44 10#8 "C"	14x36 12#8 "F"	14x50 18#8 "N"	16x24 8#8 "A"	14x32 14#8 "I"	16x32 12#8 "G"	16x42 18#8 "N"	14x24 8#8 #3@12 "B"	14x48 12#8 #3@12 "F"	12x96 20#8 "O"	16x32 10#8 "D"	
LEVEL 5	SIZE REINFORCING COLUMN TYPE															
LEVEL 4	SIZE REINFORCING COLUMN TYPE															
LEVEL 3	SIZE REINFORCING COLUMN TYPE															
LEVEL 2	SIZE REINFORCING COLUMN TYPE															
MEZZANINE	SIZE REINFORCING COLUMN TYPE															
LEVEL 1	SIZE REINFORCING COLUMN TYPE	20x24 10#8 "D"	16x36 12#8 "G"	20x32 12#8 "G"	16x44 16#8 "L"	16x52 22#8 "P"	16x68 26#8 "Q"	16x24 8#8 "A"	18x36 16#8 "L"	SEE PLAN SEE PLAN "G"	16x52 22#8 "P"	SEE PLAN SEE PLAN SEE PLAN	SEE PLAN SEE PLAN SEE PLAN	20x96 42#8 "T"	16x44 14#8 "J"	
(TOP OF MAT)																
	COL. MARK	CT-1	CT-2	CT-3	CT-4	CT-5	CT-6	CT-7	CT-8	CT-9	CT-10	CT-11	CT-12	CT-13	CT-14	
	UNITS	(2)	(2)	(2)	(1)	(1)	(1)	(1)	(1)	(2)	(6)	(1)	(1)	(1)	(1)	
	LOCATION	D@4, F@4	D@9, H@4	T@7, T@8	F@5.7	D@8	G@7	AA@20	P@7	M@6 M@7	F@8, H@8 K@8, L@8 M@8, Q@8	D@6	D@7	S@8	P@6	

NOTES :

1) SEE S602 FOR COLUMN TYPES.
2) SEE S601 FOR ODD COLUMN SIZES.
3) SEE 1/S605 FOR COLUMN TIES AND DETAILS.
4) SEE S604 FOR TRANSITION PKG. COLUMNS

PARKING COLUMN SCHEDULE

	COL. MARK	C-20	C-21	C-22	C-23	C-24	C-25	C-26	C-27	C-28	C-29	C-30	C-31	C-32	C-33	C-34	C-35	CONCRETE STRENGTH
LEVEL 6 (PODIUM)																		f'c = 6,000 PSI fy = 75 KSI
L. PKG-5	SIZE REINFORCING TYP. TIES SECTION TYPE																	
L. PKG-4	SIZE REINFORCING TYP. TIES SECTION TYPE																	
L. PKG-3	SIZE REINFORCING TYP. TIES SECTION TYPE																	
L. PKG-2	SIZE REINFORCING TYP. TIES SECTION TYPE																	
MEZZANINE	SIZE REINFORCING COLUMN TYPE	12x24 6#8 NOTE 4	12x36 10#8 NOTE 4	NOTE 2 18#8 NOTE 4	12x24 7#8 NOTE 4	12x38 11#8 NOTE 4	12x40 11#8 NOTE 4	12x52 12#8 NOTE 4	12x24 9#8 NOTE 4				12x48 10#8 NOTE 4	NOTE 2 16#8 NOTE 4			14x36 12#9 "G"	
LEVEL 1	SIZE REINFORCING COLUMN TYPE	20x24 10#8 "D"	14x36 12#8 "G"	NOTE 2 21#8 "SD-6"	14x30 12#8 "H"	14x38 12#8 "H"	14x40 14#8 "J"	14x52 14#8 "I"	14x42 16#8 "M"	20"ø 8#8 "R"	16x48 16#8 "M"	NOTE 2 18#8 "SD-4"	14x48 14#8 "I"	NOTE 2 19#8 "SD-5"	12x60 16#8 "K"	12x39 10#8 "C"		
(TOP OF MAT)																		
	COL. MARK	C-20	C-21	C-22	C-23	C-24	C-25	C-26	C-27	C-28	C-29	C-30	C-31	C-32	C-33	C-34	C-35	
	UNITS	(1)	(6)	(1)	(1)	(3)	(3)	(2)	(1)	(1)	(2)	(1)	(3)	(2)	(1)	(1)	(1)	
	LOCATION	PP@12	LL@12 MM@12 NN@12 NN@13 NN@14 NN@16	KK@12	PP@13	MM@13 MM@14 MM@15	LL@13 LL@14 LL@15	KK@13 KK@14	PP@14	PP@16	GG@18 JJ@18	KK@17	FF@17 FF@19 HH@19	EE@17 EE@19	EE@18	PP@16	QQ@16	

PARKING COLUMN SCHEDULE (UNDER TOWER)

	COL. MARK	C-1	C-2	C-3	C-4	C-5	C-6	C-6A	C-7	C-8	C-9	C-10	C-11	C-12	C-13	C-14	C-15	C-16	C-17	C-18	C-19	CONCRETE STRENGTH
LEVEL 6 (PODIUM)																						f'c = 6,000 PSI fy = 75 KSI
LEVEL 5	SIZE REINFORCING TYP. TIES SECTION TYPE																					
LEVEL 4	SIZE REINFORCING TYP. TIES SECTION TYPE																					
LEVEL 3	SIZE REINFORCING TYP. TIES SECTION TYPE																					
LEVEL 2	SIZE REINFORCING TYP. TIES SECTION TYPE							24x24 10#8 NOTE 3	16x24 10#8 NOTE 3								12x36 10#8 NOTE 3				12x36 10#8 NOTE 3	
MEZZANINE	SIZE REINFORCING TYP. TIES SECTION TYPE																					
LEVEL 1	SIZE REINFORCING COLUMN TYPE	NOTE 2 16#8 "SD-1"	16x30 10#8 "D"	16x48 16#8 "M"	16x48 16#8 "L"	16x44 14#8 "J"	24x24 10#8 "D"	NOTE 2 18#8 "SD-2"	NOTE 2 18#8 "SD-3"	16x16 8#8 "A"	16x36 12#8 "G"	16x52 18#8 "N"	20"ø 10#8 "R"	24"ø 10#8 "R"	16x104 36#8 "S"	NOTE 2 32#8 "SD-7"	14x60 18#8 "N"	12x36 11#8 "E"	12x78 20#8 "O"	12x36 10#8 "C"	16x36 12#8 "G"	
(TOP OF MAT)																						
REMARKS	COL. MARK	C-1	C-2	C-3	C-4	C-5	C-6	C-6A	C-7	C-8	C-9	C-10	C-11	C-12	C-13	C-14	C-15	C-16	C-17	C-18	C-19	
	UNITS	(1)	(8)	(1)	(2)	(1)	(1)	(1)	(3)	(3)	(1)	(2)	(3)	(3)	(1)	(1)	(1)	(1)	(1)	(3)	(1)	
	LOCATION	A@8	A@11,B@11 D@11,F@11 H@11,K@11 L@11,M@11	B@8	S@9.5 Q@10	U@8.5	V@DD	Y@21	Z@21 AA@21 BB@21	Z@23 AA@23 BB@23	Y@23	W@23 TT@20	N@22 N@2 N@3	L@1 L@4 K@4	K@1	TT@16	C@5	QQ@13	RR@13	QQ@12 RR@12 SS@12	E@5	

AISE
ALLISON IDE
STRUCTURAL ENGINEERS LLC
900 Fort Street Mall Suite 1670
Honolulu, HI 96813-3717
808 536 2108
johnallison@allisonide.com

JOHN S. ALLISON
LICENSED PROFESSIONAL ENGINEER
No. 5933-S
HAWAII, U.S.A.

Signature
Expiration Date:

This work was prepared by me or under my supervision. Construction of this project will be under my observation. Observation as defined in Section 16-115-2 of Hawaii Administrative Rules 9-12-02 Title 16, Chapter 115, Professional Engineers, Architects, Surveyors, and Landscape Architects.

DEVELOPER:
CALIFORNIA INVESTMENT REGIONAL CENTER, LLC

PROJECT OWNER:
HAWAII CITY PLAZA, LP

Hawaii City Plaza
Honolulu, Hawaii
710 Sheridan Street
TMK 2-3-014: Parcels 002, 004, & 011

PERMIT SET

DATE 2019 MARCH 19
AISE JOB No 17001.TD

1 2018 11-16

SHEET TITLE
COLUMN SCHEDULE

SHEET NO.
S601

F:\2017 JOBS\17001.TD Hawaii City Plaza TOD March 11 2018 home\Working DWG March 11 2018\17001.TD S601-S602-S603-S604-S605 CO SCHEDULE & TYPES C-35 removed Oct 30 2018.dwg, 3/22/2019 1:28:21 PM, AutoCAD PDF (General Documentation).pc3

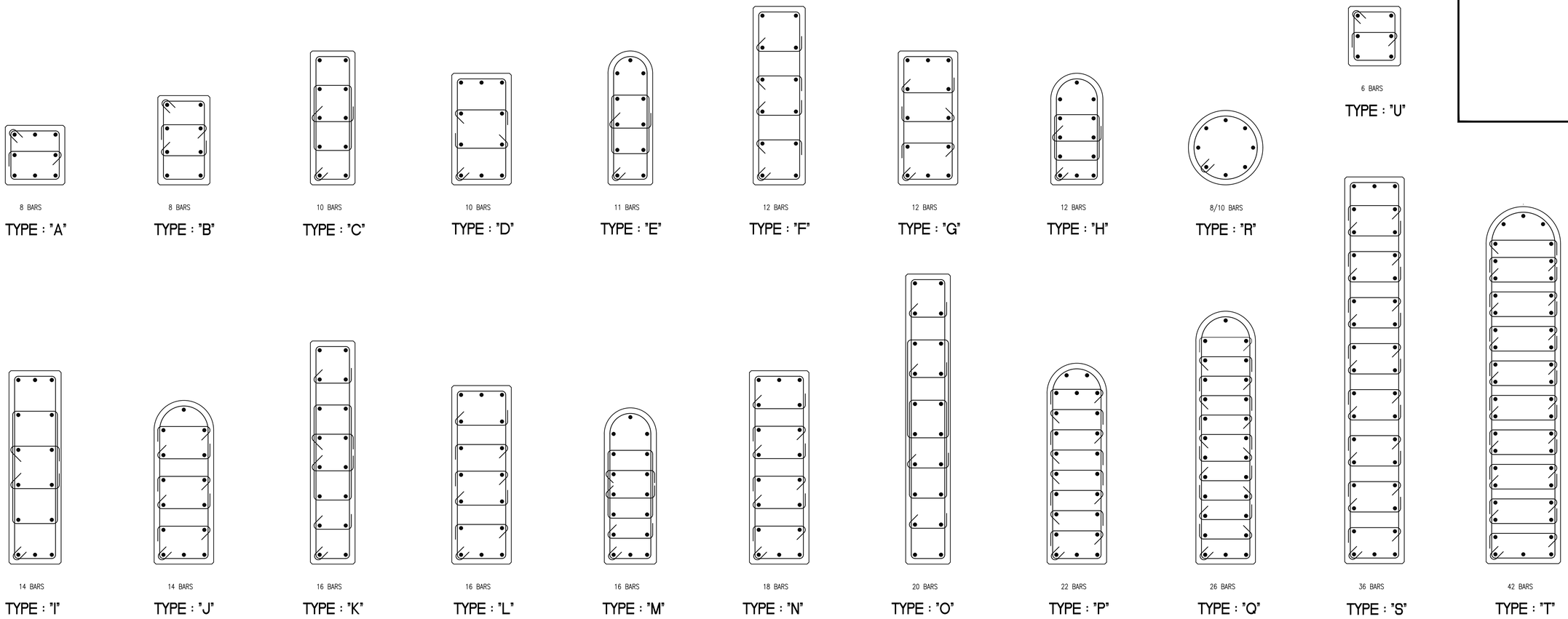

1 TOWER AND PARKING COLUMNS TYPES
SCALE : 1"=1'-0"

VERIFY ALL DIM.
W/ ARCHITECT

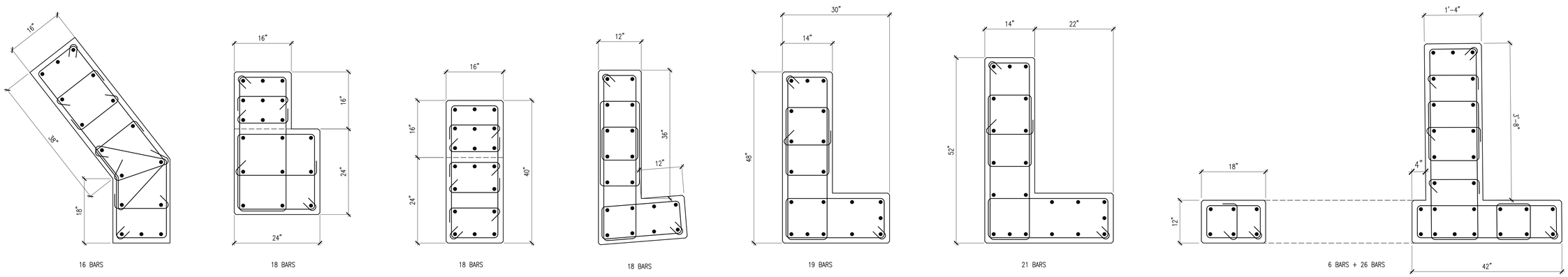

2 PARKING COLUMNS SPECIAL DIMENSIONS TYPES
SCALE : 1"=1'-0"

AISE
ALLISON IDE
STRUCTURAL ENGINEERS LLC
900 Fort Street Mall Suite 1670
Honolulu, HI 96813-3717
808 556 2108
johnallison@allisonide.com

JOHN S. ALLISON
LICENSED PROFESSIONAL ENGINEER
No. 5933-S
HAWAII, U.S.A.
Signature
Expiration Date:

This work was prepared by me or under my supervision. Construction of this project will be under my observation. Observation as defined in Section 16-115-2 of Hawaii Administrative Rules 9-12-02 Title 16, Chapter 115, Professional Engineers, Architects, Surveyors, and Landscape Architects.

DEVELOPER:
CALIFORNIA INVESTMENT REGIONAL CENTER, LLC

PROJECT OWNER:
HAWAII CITY PLAZA, LP

Hawaii City Plaza
Honolulu, Hawaii
710 Sheridan Street
TMK 2-3-014: Parcels 002, 004, & 011

PERMIT SET

DATE 2019 MARCH 19
AISE JOB No 17001.TD

1	2018 11-16

SHEET TITLE
COLUMN TYPES

SHEET NO.
S602

TRANSITION AT LEVEL 6TH

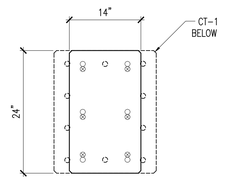

6 BARS

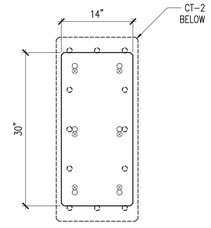

6 BARS

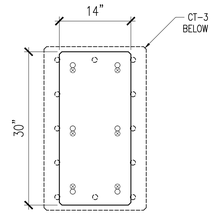

6 BARS

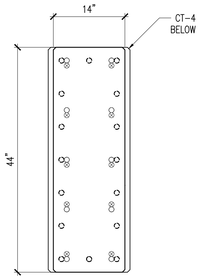

10 BARS

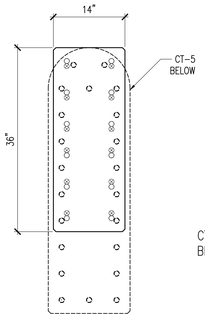

12 BARS

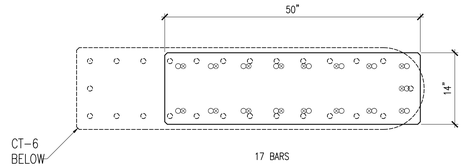

17 BARS

COLUMS AT GROUND LEVEL

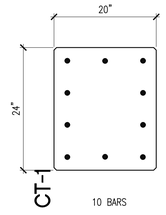

10 BARS

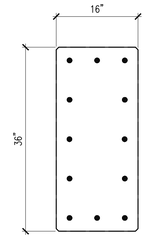

12 BARS

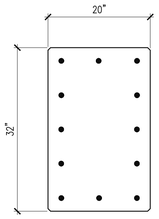

12 BARS

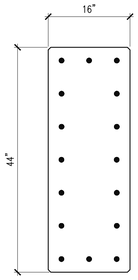

16 BARS

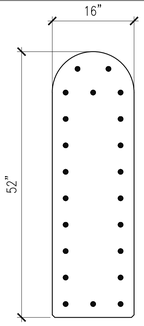

22 BARS

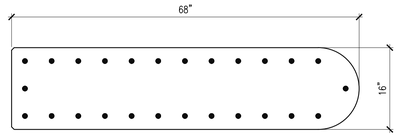

26 BARS

CT-1	CT-2	CT-3	CT-4	CT-5	CT-6

NOTES:

1. ● INDICATES LOWER BAR EXTENDING INTO COLUMN ABOVE
2. ◌ INDICATES LOWER BAR STOPPING BELOW FLOOR.
3. ⊗ INDICATES COLUMN DOWEL BAR EXTENDING INTO COLUMN ABOVE.
4. ○ INDICATES UPPER COLUMN BAR.

TRANSITION AT LEVEL 6TH

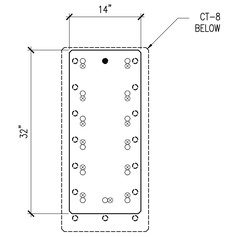

14 BARS

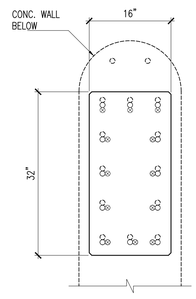

12 BARS

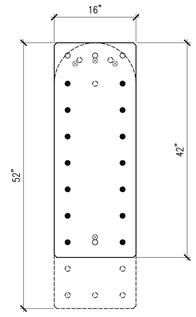

18 BARS

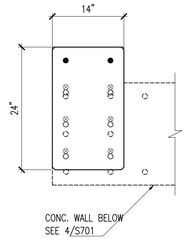

8 BARS

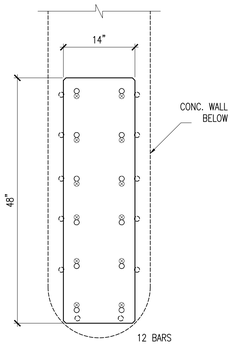

12 BARS

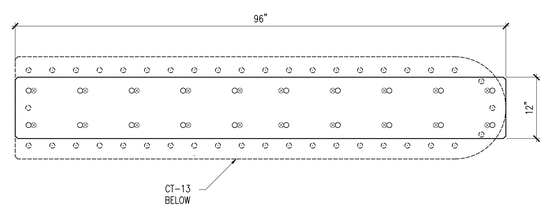

20 BARS

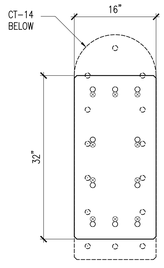

10 BARS

COLUMS AT GROUND LEVEL

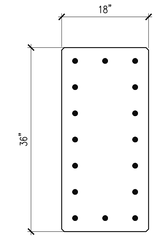

16 BARS

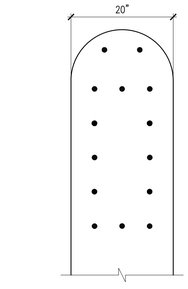

NOTE : SEE 2/701

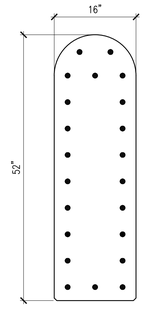

22 BARS

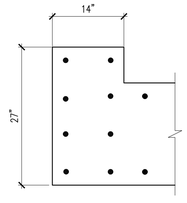

NOTE : SEE 4/701

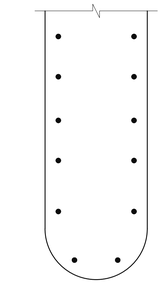
NOTE : SEE 4/701

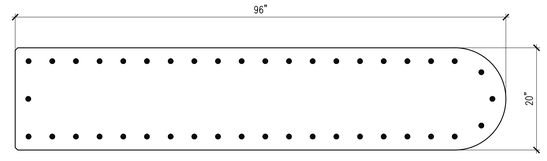

42 BARS

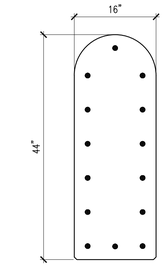

14 BARS

CT-8	CT9	CT-10	CT-11	CT-12	CT-13	CT-14

AISE
ALLISON IDE
STRUCTURAL ENGINEERS LLC
900 Fort Street Mall Suite 1670
Honolulu, HI 96813-3717
808 536 2108
johnallison@allisonide.com

JOHN S. ALLISON
LICENSED PROFESSIONAL ENGINEER
No. 5933-S
HAWAII, U.S.A.
Signature
Expiration Date:

This work was prepared by me or under my supervision. Construction of this project will be under my observation. Observation as defined in Section 16-115-2, Hawaii Administrative Rules 9-12-02 Title 16, Chapter 115, Professional Engineers, Architects, Surveyors, and Landscape Architects.

DEVELOPER:
CALIFORNIA INVESTMENT REGIONAL CENTER, LLC

PROJECT OWNER:
HAWAII CITY PLAZA, LP

Hawaii City Plaza
Honolulu, Hawaii
710 Sheridan Street
TMK 2-3-014: Parcels 002, 004, & 011

PERMIT SET

DATE 2019 MARCH 19
AISE JOB No 17001.TD

1	2018 11-16	

SHEET TITLE
TRANSITION TOWERS COLUMNS

SHEET NO.
S603

C:\Users\John\Documents\2017 JOBS\17001.TD Hawaii City Plaza 100 March 11, 2018 Arena Working FWG March 11, 2018\17001.TD 3601-3602 3603-3604-3605 60 SHEDULE A 17X11 C-3D removed Oct 30, 2018.dwg, 3/22/2019 1:28:50 PM, AutoCAD PDF (General Documentation).pc3

TRANSITION AT MEZZANINE LEVEL

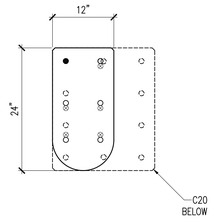

6 BARS

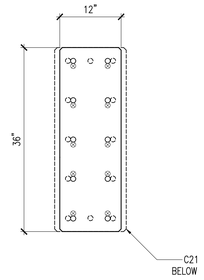

10 BARS

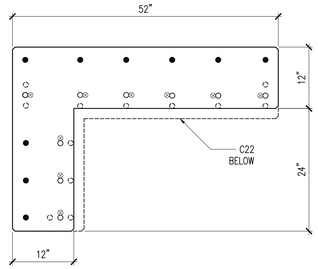

18 BARS

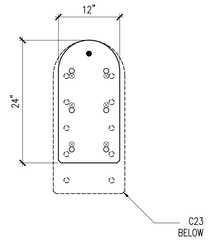

7 BARS

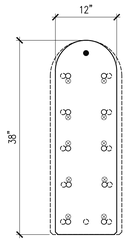

11 BARS

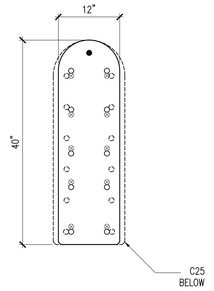

11 BARS

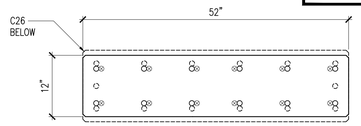

12 BARS

COLUMS AT GROUND LEVEL

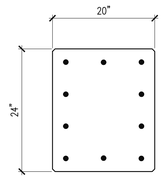

10 BARS

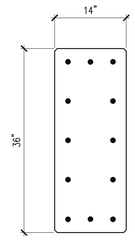

12 BARS

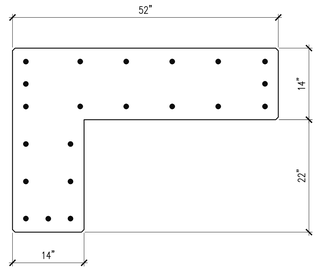

21 BARS

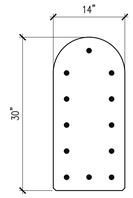

12 BARS

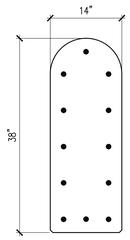

12 BARS

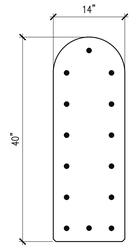

14 BARS

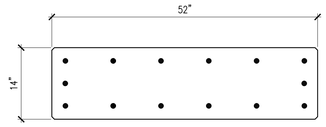

14 BARS

C-20	C-21	C-22	C-23	C-24	C-25	C-26

NOTES:

1. ● INDICATES LOWER BAR EXTENDING INTO COLUMN ABOVE
2. ◌ INDICATES LOWER BAR STOPPING BELOW FLOOR.
3. ⊗ INDICATES COLUMN DOWEL BAR EXTENDING INTO COLUMN ABOVE.
4. ○ INDICATES UPPER COLUMN BAR.

TRANSITION AT MEZZANINE LEVEL

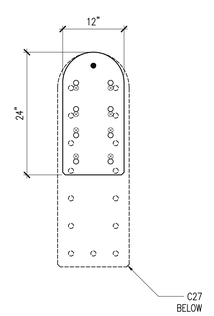

9 BARS

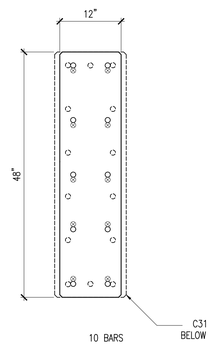

10 BARS

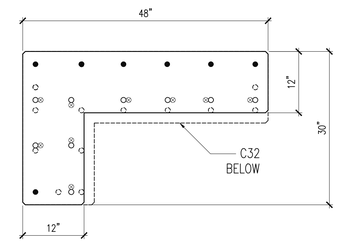

16 BARS

COLUMS AT GROUND LEVEL

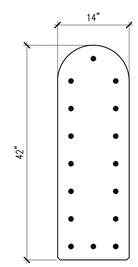

16 BARS

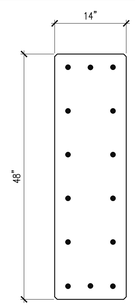

14 BARS

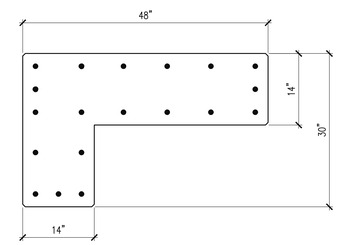

19 BARS

C-27	C-31	C-32

TRANSITION AT 2ND LEVEL

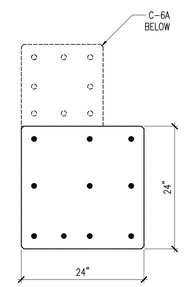

10 BARS

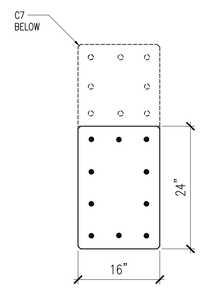

10 BARS

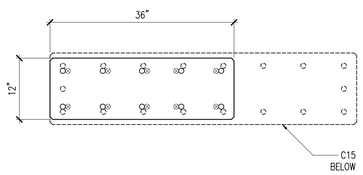

10 BARS

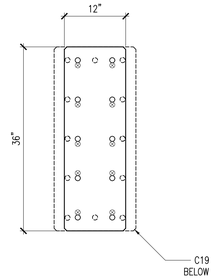

10 BARS

COLUMS AT GROUND LEVEL

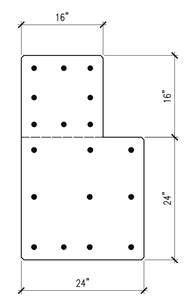

18 BARS

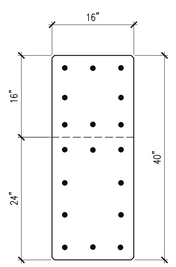

18 BARS

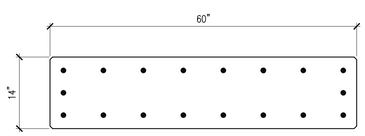

18 BARS

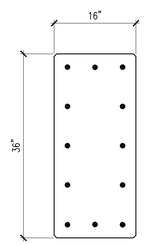

12 BARS

C-6A	C-7	C-15	C-19

AISE
ALLISON IDE
STRUCTURAL ENGINEERS LLC
900 Fort Street Mall Suite 1670
Honolulu, HI 96813-3717
808 536 2108
johnallison@allisonide.com

JOHN S. ALLISON
LICENSED PROFESSIONAL ENGINEER
No. 5933-S
HAWAII, U.S.A.
Signature
Expiration Date:

This work was prepared by me or under my supervision. Construction of this project will be under my observation. Observation as defined in Section 16-115-2, Hawaii Administrative Rules 3-12-02 Title 16, Chapter 115, Professional Engineers, Architects, Surveyors, and Landscape Architects.

DEVELOPER:
CALIFORNIA INVESTMENT REGIONAL CENTER, LLC

PROJECT OWNER:
HAWAII CITY PLAZA, LP

Hawaii City Plaza
Honolulu, Hawaii
710 Sheridan Street
TMK 2-3-014: Parcels 002, 004, & 011

PERMIT SET

DATE 2019 MARCH 19
AISE JOB No 17001.TD

1	2018 11-16	

SHEET TITLE

TRANSITION PARKING COLUMNS

SHEET NO.

S604

\2017 JOBS\17001.TD Hawaii City Plaza TOD March 11 2018 Home\Working DWG March 11 2018\17001.TD S601-S602-S603-S604-S605 - CD SCHEDULE & TYPES 6-35 removed Oct 30 2018.dwg, 3/22/2019 1:28:35 PM, AutoCAD PDF (General Documentation).pc3

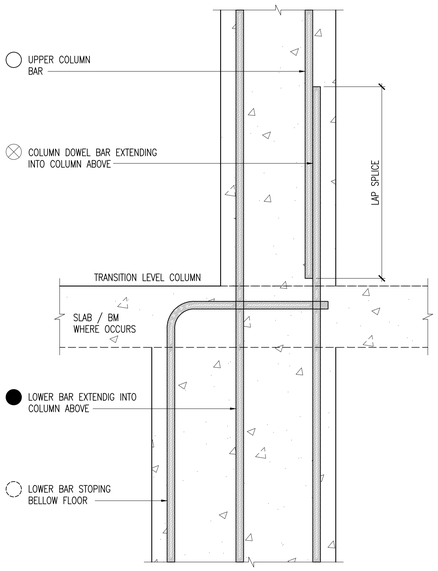

2 TRANSITION COLUMNS DETAIL and STEEL BARS SYMBOLS

NOT TO SCALE

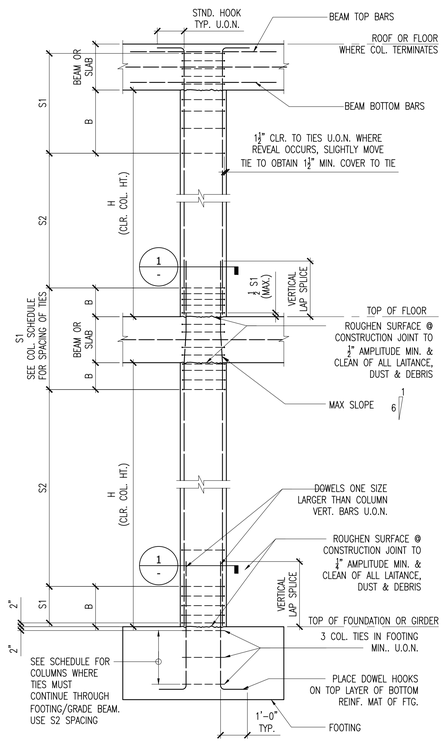

1 TYPICAL TIED COLUMN ELEVATION

NOT TO SCALE

NOTES:

1. UNLESS OTHERWISE NOTED S1 TIE SPACING SHALL BE THE LEAST OF:
   - 8 VERTICAL BAR DIA.
   - 24 TIE DIA.
   - ½ LEAST COL. DIMENSION (12" MIN.)
2. UNLESS OTHERWISE NOTED B SHALL BE THE GREATEST OF:
   - ⅙ H
   - MAX. COL. DIMENSION
   - 18"
3. UNLESS OTHERWISE NOTED S2 TIE SPACING SHALL BE THE LEAST OF:
   - 16 VERTICAL BAR DIAMETER
   - 48 TIE DIA.
   - LEAST COL. DIMENSION.
4. LAP SPLICE. SEE 6/S003
5. WHERE TWO VERTICAL BARS OF DIFFERENT SIZE LAP, USE THE SMALLER DIAMETER FOR THE LAP SPLICE.
6. SEE COLUMN SCHEDULE AND APPROPRIATE COL. DETAILS FOR COL. SIZE, CONFIGURATION BAR ARRANGEMENT, SPACING, SPLICES, ETC.
7. EMBED HORIZONTAL WALL REINF. WHENEVER WALL IS ABUT TO COLUMN.
8. SEE ARCH. DRAWINGS FOR REVEALS IN COL. SURFACES. PROVIDE 1½" CLEAR COVER TO REBAR AT REVEALS.
9. APPROVED ICC/ES MECHANICAL SPLICES CAPABLE OF DEVELOPING THE FULL ULTIMATE TENSION STRENGTH OF REBAR OR WELDED BUTT SPACES MAY BE USED IN LIEU OF LAP SPLICES, WITH PERMISSION OF THE ARCHITECT.
10. SEE 3/S003 FOR COLUMN TIE BEND DETAIL.
11. PROVIDE #3 COLUMN TIE UNLESS OTHERWISE NOTED.

AISE
ALLISON IDE
STRUCTURAL ENGINEERS LLC
900 Fort Street Mall Suite 1670
Honolulu, HI 96813-3717
808 536 2108
johnallison@allisonide.com

JOHN S. ALLISON
LICENSED PROFESSIONAL ENGINEER
No. 5933-S
HAWAII, U.S.A.
Signature
Expiration Date

This work was prepared by me or under my supervision. Construction of this project will be under my observation. Observation as defined in Section 16-115-2 of Hawaii Administrative Rules 9-12-02 Title 16, Chapter 115, Professional Engineers, Architects, Surveyors, and Landscape Architects.

DEVELOPER:
CALIFORNIA INVESTMENT REGIONAL CENTER, LLC

PROJECT OWNER:
HAWAII CITY PLAZA, LP

Hawaii City Plaza
Honolulu, Hawaii
710 Sheridan Street
TMK 2-3-014: Parcels 002, 004, & 011

PERMIT SET

DATE 2019 MARCH 19
AISE JOB No 17001.TD

1	2018 11-16

SHEET TITLE
COLUMN DETAILS

SHEET NO.
S605

\2017 JOBS\17001.TD Hawaii City Plaza TOD March 11 2018 home\Working DWG March 11 2018\17001.TD S601-S602-S603-S604-S605 CO SCHEDULE & TYPES C-35 removed Oct 30 2018.dwg, 3/22/2019 1:28:39 PM, AutoCAD PDF (General Documentation).pc3

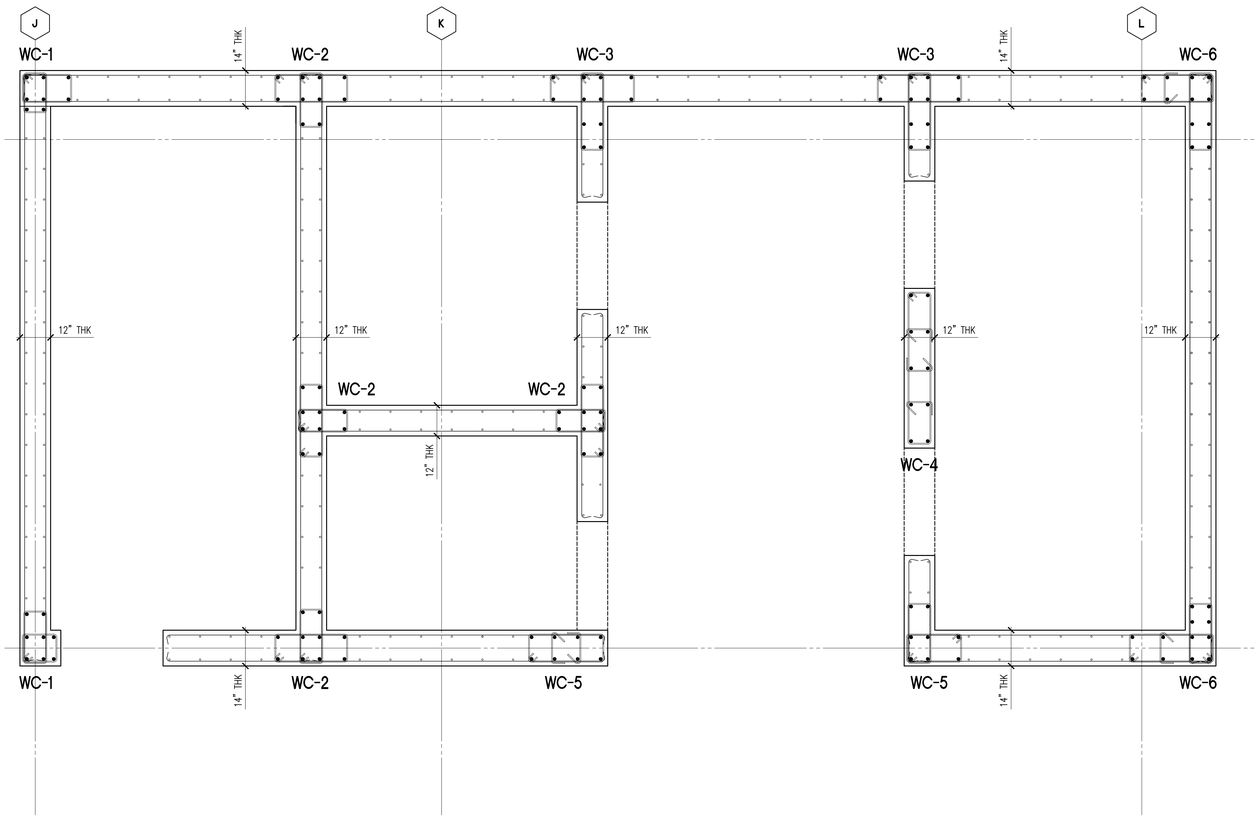

3 SHEAR WALL CORE 1 - GROUND LEVEL
SCALE : 1/2" = 1'-0"

GRAPHIC SCALE 0 6" 1' 2'

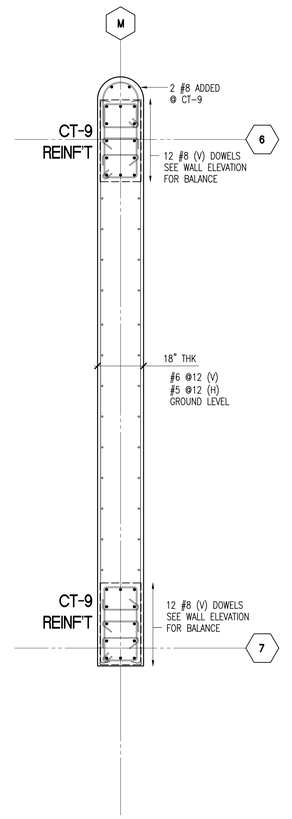

2 WALL at GL "M"
SCALE : 1/2" = 1'-0"

GRAPHIC SCALE 0 6" 1' 2'

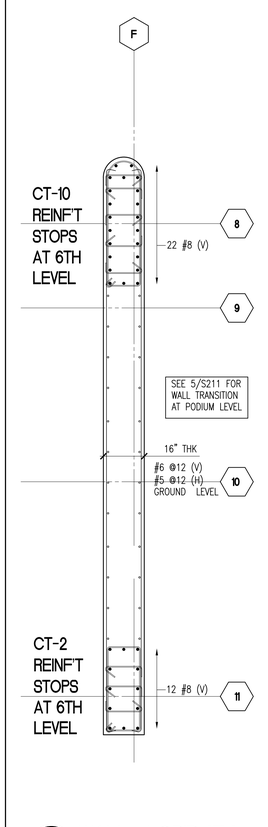

1 WALL at GRID "F"
SCALE : 1/2" = 1'-0"

GRAPHIC SCALE 0 6" 1' 2'

NOTES:

1. SEE S005 STANDARD DETAILS FOR WALL REINFORCEMENT NOT SHOWN.
2. THE SPACE BETWEEN THE LAST VERTICAL REINF. @ WALL COL. AND THE FIRST WALL WEB VERTICAL REINF. SHALL BE NO MORE THAN 8"
3. WALL COLUMN REINF. SHALL BE TENSION LAP SPLICED. SEE TABLE 6/S003 FOR SPLICE LENGTH.
4. AT TRANSITION LEVELS, WALL COLUMN REINF. AND REINF. CAGE SHALL EXTEND @ LEAST ONE LEVEL BELOW AND DOWEL ACCORDINGLY.
5. WALL COLUMN FOUNDATION DOWELS SHALL BE ONE SIZE LARGER THAN THE VERTICAL BARS, EXCEPT FOR #11 BARS.
6. FOR HEADER AND SILL, SEE SHEET S201.
7. USE #3 WALL COLUMNS TIES# @ 12" o.c. SPACE.
8. USE WALL REINFORCEMENT SCHEDULE UNLESS OTHERWISE NOTED ON ELEVATIONS.

SYMBOLS:
- ● WALL COLUMN VERTICAL REINFORCEMENT
- ○ EXTENDED VERTICAL BAR FROM WALL ABOVE OR BELOW

CORE WALL REINFORCEMENT SCHEDULE

LEVELS		WALL THKS	f'c CONC STRENGTH	WALL-COLUMN REINFORCEMENT										WALL REINFORCEMENT	
FROM	TO			WC-1	WC-2	WC-3	WC-4	WC-5	WC-6	WC-7	WC-8			HORIZONTAL	VERTICAL
1ST	2ND	VARIES	6,000 PSI	8#9	10#9	12#9	10#9	8#9	12#9	12#9	10#9			#4@12 EF	#6@12 EF
2ND	3RD		6,000 PSI	8#9	10#9	12#9	10#9	8#9	12#9	12#9	10#9			#4@12 EF	#4@12 EF
3RD	5TH		6,000 PSI	8#7	10#7	12#7	10#7	8#7	12#7	12#7	10#7			#4@12 EF	#4@12 EF
5TH	6TH		6,000 PSI	8#7	10#7	12#7	10#7	8#7	12#7	12#7	10#7			#4@12 EF	#4@12 EF
6TH	7TH		5,000 PSI	8#5	10#5	12#5	10#5	8#5	12#5	10#5	10#5			#4@12 EF	#4@12 EF
7TH	8TH		5,000 PSI	8#5	10#5	12#5	10#5	8#5	12#5	10#5	10#5			#4@12 EF	#4@12 EF
8TH	26TH		5,000 PSI	8#5	10#5	12#5	10#5	8#5	12#5	10#5	10#5			#4@12 EF	#4@12 EF
							WC-9	WC-10	WC-11	WC-12	WC-13	WC-14	WC-15		
1ST	2ND	VARIES	6,000 PSI				8#9	6#9	4#9	14#9	12#9	12#9	6#9	#4@12 EF	#5@12 EF
2ND	3RD		6,000 PSI				8#9	6#9	4#9	14#9	12#9	12#9	6#9	#4@12 EF	#4@12 EF
3RD	5TH		6,000 PSI				8#7	6#7	4#7	12#9		12#9	6#7	#4@12 EF	#4@12 EF
5TH	6TH		6,000 PSI				8#7	6#7	4#7	12#9		12#9	6#7	#4@12 EF	#4@12 EF
6TH	7TH		5,000 PSI				8#7	6#7	4#7	14#9	12#7	12#9	6#7	#4@12 EF	#4@12 EF

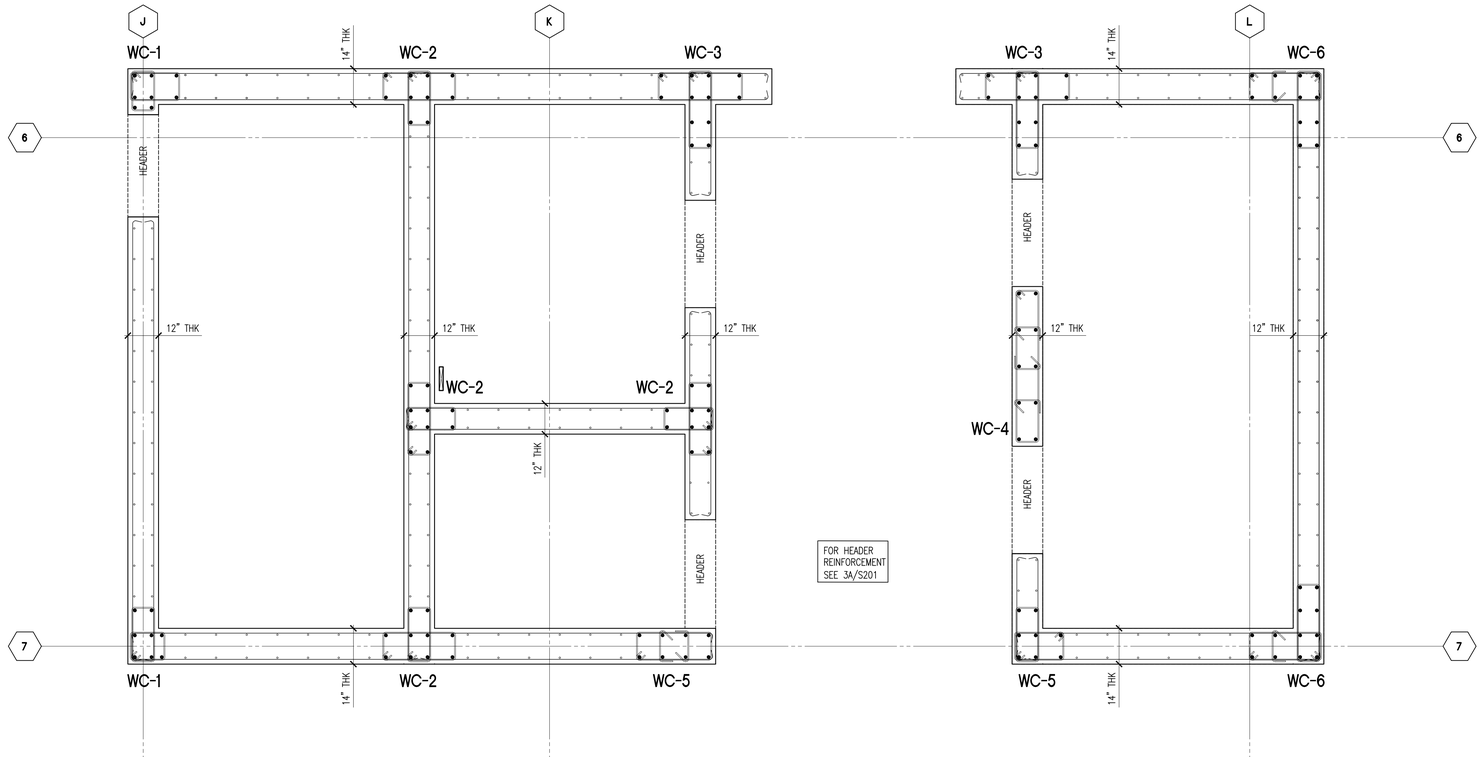

5 SHEAR WALL CORE 1 - LEVEL 2
SCALE : 1/2" = 1'-0"

GRAPHIC SCALE 0 6" 1' 2'

AISE
ALLISON IDE
STRUCTURAL ENGINEERS LLC
900 Fort Street Mall Suite 1670
Honolulu, HI 96813-3717
808 536 2108
johnallison@allisonide.com

JOHN S. ALLISON LICENSED PROFESSIONAL ENGINEER No. 5933-S HAWAII, U.S.A.
Signature
Expiration Date

This work was prepared by me or under my supervision. Construction of this project will be under my observation. Observation as defined in Section 16-115-2, Hawaii Administrative Rules 9-12-02 Title 16, Chapter 115, Professional Engineers, Architects, Surveyors, and Landscape Architects.

DEVELOPER:
CALIFORNIA INVESTMENT REGIONAL CENTER, LLC

PROJECT OWNER:
HAWAII CITY PLAZA, LP

Hawaii City Plaza
Honolulu, Hawaii
710 Sheridan Street
TMK 2-3-014: Parcels 002, 004, & 011

PERMIT SET

DATE 2019 MARCH 19
AISE JOB No 17001.TD

1 2018 11-16	

SHEET TITLE
STAIR 1
GROUND - 2ND LEVEL

SHEET NO.
S701

C:\17_AISE\17001.10 Hawaii City Plaza\17001.10 Hawaii City Plaza_R20 March 11, 2018.rvt 3/11/2019 1:28:40 PM

NOTES:

1. SEE S005 STANDARD DETAILS FOR WALL REINFORCEMENT NOT SHOWN.
2. THE SPACE BETWEEN THE LAST VERTICAL REINF. @ WALL COL. AND THE FIRST WALL WEB VERTICAL REINF. SHALL BE NO MORE THAN 8"
3. WALL COLUMN REINF. SHALL BE TENSION LAP SPLICED. SEE TABLE 6/S003 FOR SPLICE LENGTH.
4. AT TRANSITION LEVELS, WALL COLUMN REINF. AND REINF. CAGE SHALL EXTEND @ LEAST ONE LEVEL BELOW AND DOWEL ACCORDINGLY.
5. WALL COLUMN FOUNDATION DOWELS SHALL BE ONE SIZE LARGER THAN THE VERTICAL BARS, EXCEPT FOR #11 BARS.
6. FOR HEADER AND SILL, SEE SHEET S201.
7. USE #3 WALL COLUMNS TIES# @ 12" o.c. SPACE.
8. USE WALL REINFORCEMENT SCHEDULE UNLESS OTHERWISE NOTED ON ELEVATIONS.

SYMBOLS:
- ● WALL COLUMN VERTICAL REINFORCEMENT
- ○ EXTENDED VERTICAL BAR FROM WALL ABOVE OR BELOW

CORE WALL REINFORCEMENT SCHEDULE

LEVELS		WALL THKS	f'c CONC STRENGTH	WALL-COLUMN REINFORCEMENT										WALL REINFORCEMENT	
FROM	TO			WC-1	WC-2	WC-3	WC-4	WC-5	WC-6	WC-7	WC-8			HORIZONTAL	VERTICAL
1ST	2ND	VARIES	6,000 PSI	8#9	10#9	12#9	10#9	8#9	12#9	12#9	10#9			#4@12 EF	#6@12 EF
2ND	3RD		6,000 PSI	8#9	10#9	12#9	10#9	8#9	12#9	12#9	10#9			#4@12 EF	#4@12 EF
3RD	5TH		6,000 PSI	8#7	10#7	12#7	10#7	8#7	12#7	12#7	10#7			#4@12 EF	#4@12 EF
5TH	6TH		6,000 PSI	8#7	10#7	12#7	10#7	8#7	12#7	12#7	10#7			#4@12 EF	#4@12 EF
6TH	7TH		5,000 PSI	8#5	10#5	12#5	10#5	8#5	12#5	10#5	10#5			#4@12 EF	#4@12 EF
7TH	8TH		5,000 PSI	8#5	10#5	12#5	10#5	8#5	12#5	10#5	10#5			#4@12 EF	#4@12 EF
8TH	26TH		5,000 PSI	8#5	10#5	12#5	10#5	8#5	12#5	10#5	10#5			#4@12 EF	#4@12 EF
							WC-9	WC-10	WC-11	WC-12	WC-13	WC-14	WC-15		
1ST	2ND	VARIES	6,000 PSI				8#9	6#9	4#9	14#9	12#9	12#9	6#9	#4@12 EF	#5@12 EF
2ND	3RD		6,000 PSI				8#9	6#9	4#9	14#9	12#9	12#9	6#9	#4@12 EF	#4@12 EF
3RD	5TH		6,000 PSI				8#7	6#7	4#7	12#9		12#9	6#7	#4@12 EF	#4@12 EF
5TH	6TH		6,000 PSI				8#7	6#7	4#7	12#9		12#9	6#7	#4@12 EF	#4@12 EF
6TH	7TH		5,000 PSI				8#7	6#7	4#7	14#9	12#7	12#9	6#7	#4@12 EF	#4@12 EF

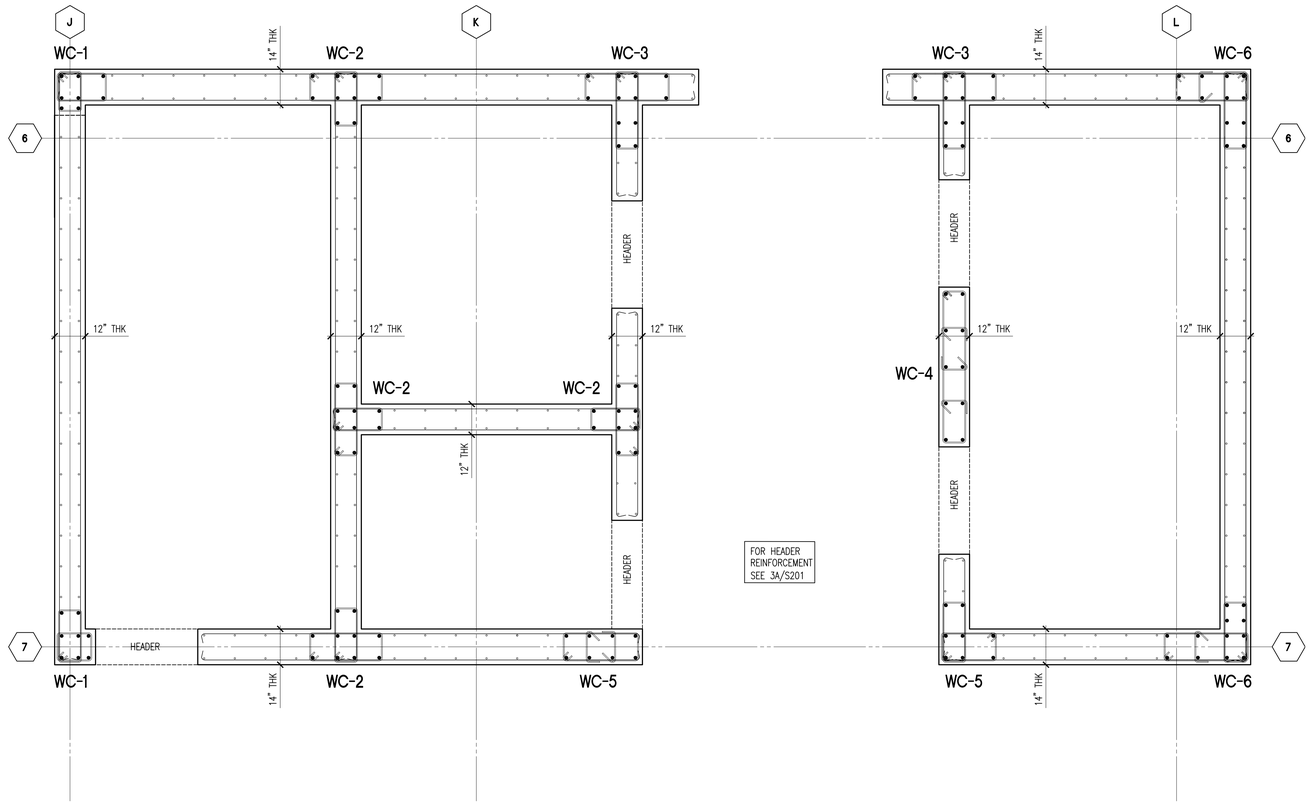

1 SHEAR WALL CORE 1 - LEVEL 3RD - 5TH
SCALE : 1/2" = 1'-0"

GRAPHIC SCALE 0 6" 1' 2'

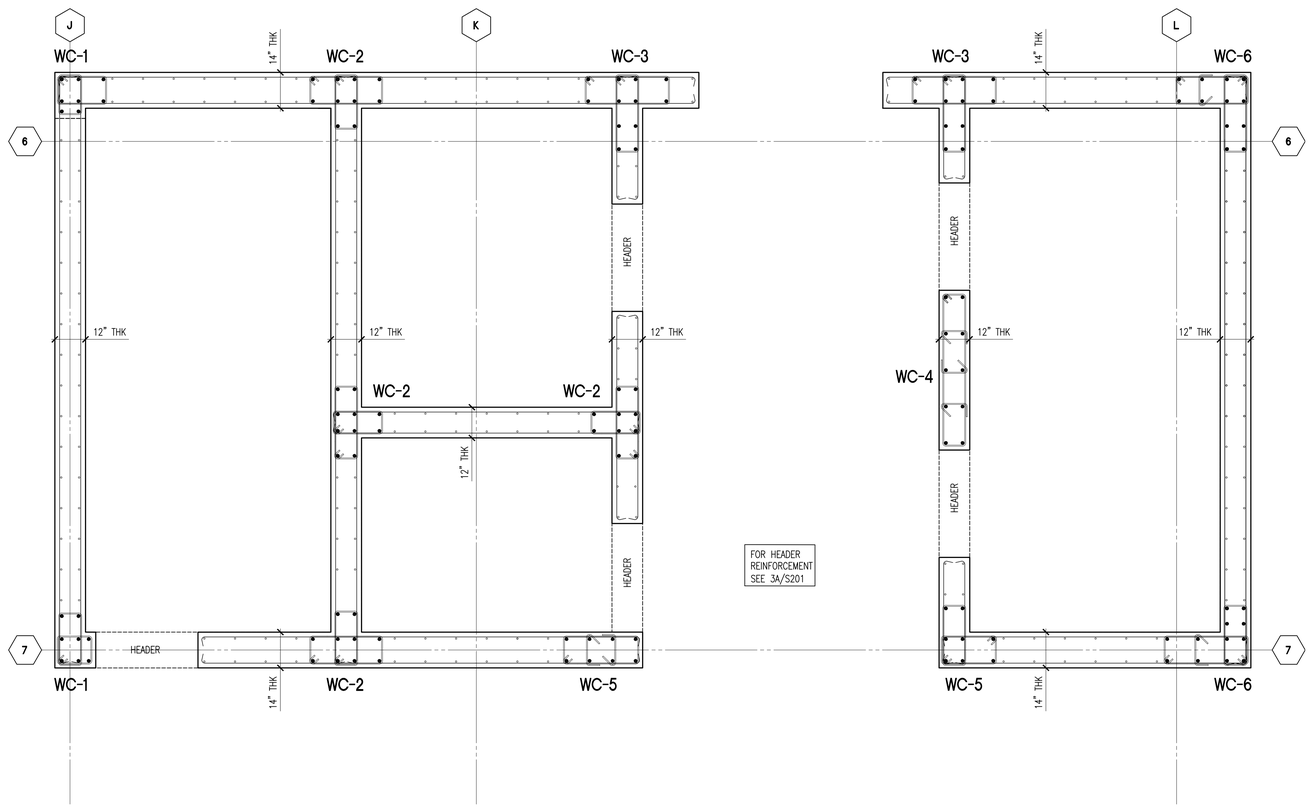

2 SHEAR WALL CORE 1 - LEVEL 6TH
SCALE : 1/2" = 1'-0"

GRAPHIC SCALE 0 6" 1' 2'

AISE
ALLISON IDE
STRUCTURAL ENGINEERS LLC
900 Fort Street Mall Suite 1670
Honolulu, HI 96813-3717
808 536 2108
johnallison@allisonide.com

JOHN S. ALLISON LICENSED PROFESSIONAL ENGINEER No. 5933-S HAWAII, U.S.A.

Signature
Expiration Date

This work was prepared by me or under my supervision. Construction of this project will be under my observation. Observation as defined in Section 16-115-2 of the Hawaii Administrative Rules 9-12-02 Title 16, Chapter 115, Professional Engineers, Architects, Surveyors, and Landscape Architects.

DEVELOPER:
CALIFORNIA INVESTMENT REGIONAL CENTER, LLC

PROJECT OWNER:
HAWAII CITY PLAZA, LP

Hawaii City Plaza
Honolulu, Hawaii
710 Sheridan Street
TMK 2-3-014: Parcels 002, 004, & 011

PERMIT SET

DATE 2019 MARCH 19
AISE JOB No 17001.TD

1	2018 11-16	

SHEET TITLE
STAIR 1
3RD - 6TH LEVEL

SHEET NO.
S702

X:\17001 AISE\17001.TD Hawaii City Plaza\TDD March 11, 2018 Items\Working DWG March 11, 2018\17001.TD S701-2-3-4-5-6-7 CORE PLANS.dwg, 3/22/2019 1:28:54 PM, AutoCAD PDF (General Documentation).pc3

NOTES:

1. SEE S005 STANDARD DETAILS FOR WALL REINFORCEMENT NOT SHOWN.
2. THE SPACE BETWEEN THE LAST VERTICAL REINF. @ WALL COL. AND THE FIRST WALL WEB VERTICAL REINF. SHALL BE NO MORE THAN 8"
3. WALL COLUMN REINF. SHALL BE TENSION LAP SPLICED. SEE TABLE 6/S003 FOR SPLICE LENGTH.
4. AT TRANSITION LEVELS, WALL COLUMN REINF. AND REINF. CAGE SHALL EXTEND @ LEAST ONE LEVEL BELOW AND DOWEL ACCORDINGLY.
5. WALL COLUMN FOUNDATION DOWELS SHALL BE ONE SIZE LARGER THAN THE VERTICAL BARS, EXCEPT FOR #11 BARS.
6. FOR HEADER AND SILL, SEE SHEET S201.
7. USE #3 WALL COLUMNS TIES@ @ 12" o.c. SPACE.
8. USE WALL REINFORCEMENT SCHEDULE UNLESS OTHERWISE NOTED ON ELEVATIONS.

SYMBOLS:
- ● WALL COLUMN VERTICAL REINFORCEMENT
- ○ EXTENDED VERTICAL BAR FROM WALL ABOVE OR BELOW

CORE WALL REINFORCEMENT SCHEDULE

LEVELS		WALL THKS	f'c CONC STRENGTH	WALL-COLUMN REINFORCEMENT										WALL REINFORCEMENT	
FROM	TO			WC-1	WC-2	WC-3	WC-4	WC-5	WC-6	WC-7	WC-8			HORIZONTAL	VERTICAL
1ST	2ND	VARIES	6,000 PSI	8#9	10#9	12#9	10#9	8#9	12#9	12#9	10#9			#4@12 EF	#6@12 EF
2ND	3RD		6,000 PSI	8#9	10#9	12#9	10#9	8#9	12#9	12#9	10#9			#4@12 EF	#4@12 EF
3RD	5TH		6,000 PSI	8#7	10#7	12#7	10#7	8#7	12#7	12#7	10#7			#4@12 EF	#4@12 EF
5TH	6TH		6,000 PSI	8#7	10#7	12#7	10#7	8#7	12#7	12#7	10#7			#4@12 EF	#4@12 EF
6TH	7TH		5,000 PSI	8#5	10#5	12#5	10#5	8#5	12#5	10#5	10#5			#4@12 EF	#4@12 EF
7TH	8TH		5,000 PSI	8#5	10#5	12#5	10#5	8#5	12#5	10#5	10#5			#4@12 EF	#4@12 EF
8TH	26TH		5,000 PSI	8#5	10#5	12#5	10#5	8#5	12#5	10#5	10#5			#4@12 EF	#4@12 EF
							WC-9	WC-10	WC-11	WC-12	WC-13	WC-14	WC-15		
1ST	2ND	VARIES	6,000 PSI				8#9	6#9	4#9	14#9	12#9	12#9	6#9	#4@12 EF	#5@12 EF
2ND	3RD		6,000 PSI				8#9	6#9	4#9	14#9	12#9	12#9	6#9	#4@12 EF	#4@12 EF
3RD	5TH		6,000 PSI				8#7	6#7	4#7	12#9		12#9	6#7	#4@12 EF	#4@12 EF
5TH	6TH		6,000 PSI				8#7	6#7	4#7	12#9		12#9	6#7	#4@12 EF	#4@12 EF
6TH	7TH		5,000 PSI				8#7	6#7	4#7	14#9	12#7	12#9	6#7	#4@12 EF	#4@12 EF

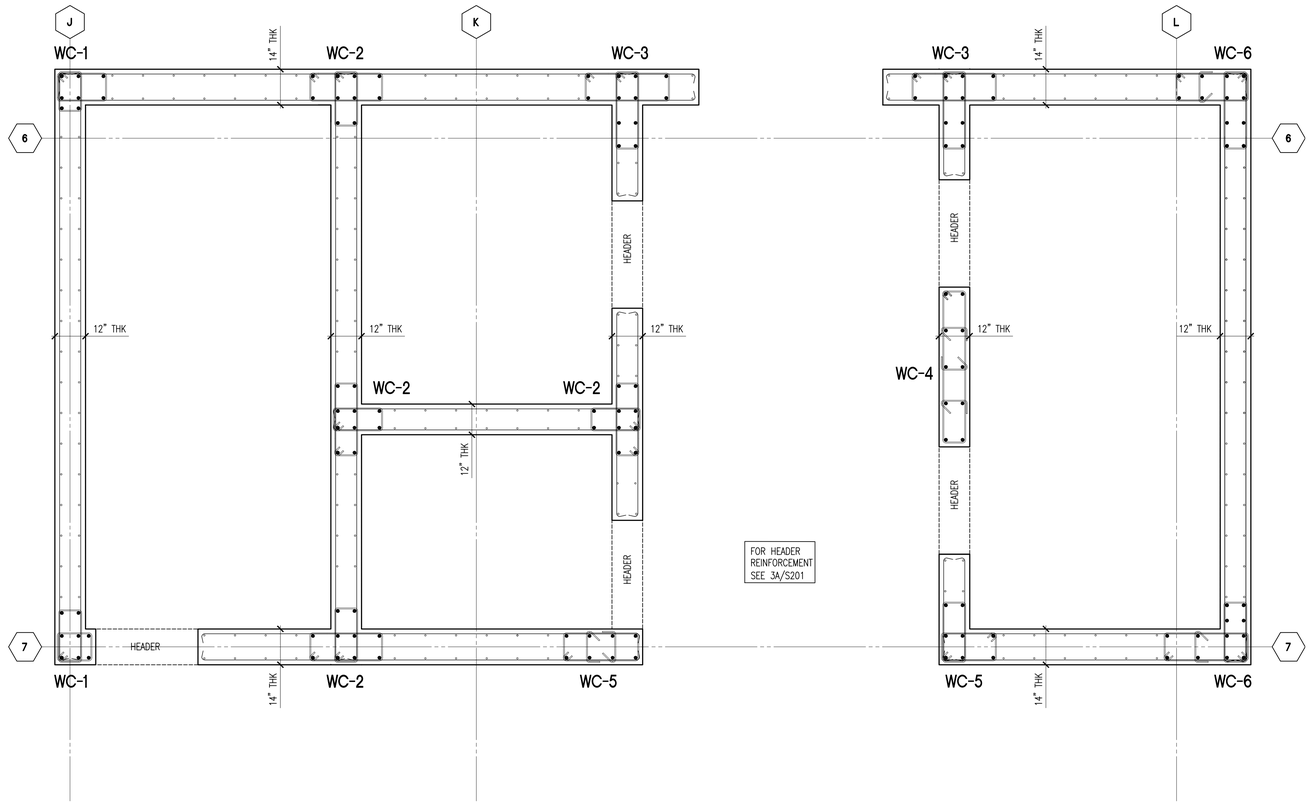

1 SHEAR WALL CORE 1 - LEVEL 7TH
SCALE : 1/2" = 1'-0"

GRAPHIC SCALE 0 6" 1' 2'

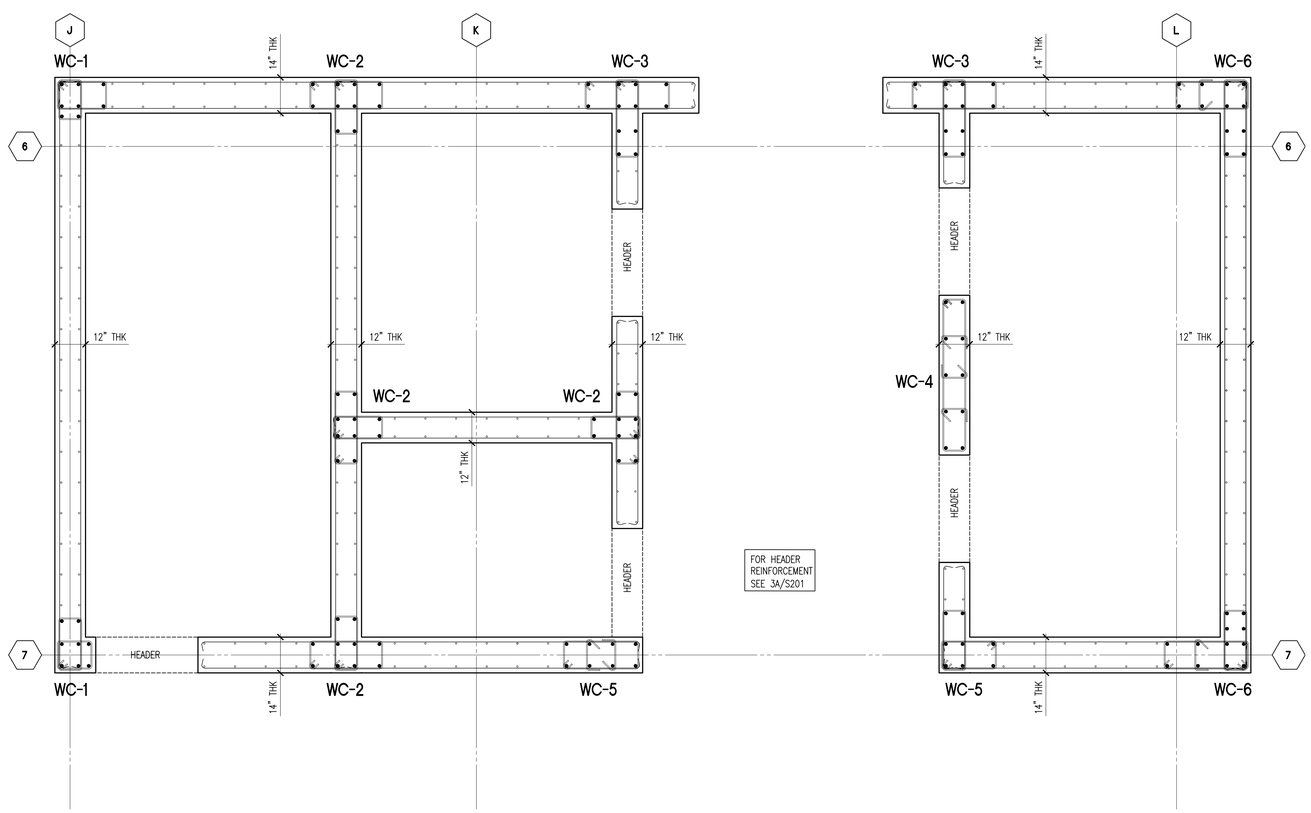

2 SHEAR WALL CORE 1 - LEVEL 8TH - ROOF
SCALE : 1/2" = 1'-0"

GRAPHIC SCALE 0 6" 1' 2'

AISE
ALLISON IDE
STRUCTURAL ENGINEERS LLC
900 Fort Street Mall Suite 1670
Honolulu, HI 96813-3717
808 536 2108
johnallison@allisonide.com

JOHN S. ALLISON LICENSED PROFESSIONAL ENGINEER No. 5933-S HAWAII, U.S.A.

Signature
Expiration Date:

This work was prepared by me or under my supervision. Construction of this project will be under my observation. Observation as defined in Section 16-115-2, Hawaii Administrative Rules 9-12-02 Title 16, Chapter 115, Professional Engineers, Architects, Surveyors, and Landscape Architects.

DEVELOPER:
CALIFORNIA INVESTMENT REGIONAL CENTER, LLC

PROJECT OWNER:
HAWAII CITY PLAZA, LP

Hawaii City Plaza
Honolulu, Hawaii
710 Sheridan Street
TMK 2-3-014: Parcels 002, 004, & 011

PERMIT SET

DATE 2019 MARCH 19
AISE JOB No 17001.TD

1	2018 11-16	

SHEET TITLE
STAIR 1
7TH - ROOF LEVEL

SHEET NO.
S703

X:\17001 JOBS\17001.TD Hawaii City Plaza TOD March 11, 2018 Items\Working DWG March 11, 2018\17001.TD S701-2-3-4-5-6-7 CORE PLANS.dwg, 3/22/2019 1:26:53 PM, AutoCAD PDF (General Documentation).pc3

NOTES:

1. SEE S005 STANDARD DETAILS FOR WALL REINFORCEMENT NOT SHOWN.
2. THE SPACE BETWEEN THE LAST VERTICAL REINF. @ WALL COL. AND THE FIRST WALL WEB VERTICAL REINF. SHALL BE NO MORE THAN 8"
3. WALL COLUMN REINF. SHALL BE TENSION LAP SPLICED. SEE TABLE 6/S003 FOR SPLICE LENGTH.
4. AT TRANSITION LEVELS, WALL COLUMN REINF. AND REINF. CAGE SHALL EXTEND @ LEAST ONE LEVEL BELOW AND DOWEL ACCORDINGLY.
5. WALL COLUMN FOUNDATION DOWELS SHALL BE ONE SIZE LARGER THAN THE VERTICAL BARS, EXCEPT FOR #11 BARS.
6. FOR HEADER AND SILL, SEE SHEET S201.
7. USE #3 WALL COLUMNS TIES# @ 12" o.c. SPACE.
8. USE WALL REINFORCEMENT SCHEDULE UNLESS OTHERWISE NOTED ON ELEVATIONS.

SYMBOLS:
- ● WALL COLUMN VERTICAL REINFORCEMENT
- ○ EXTENDED VERTICAL BAR FROM WALL ABOVE OR BELOW

CORE WALL REINFORCEMENT SCHEDULE

LEVELS		WALL THKS	f'c CONC STRENGTH	WALL-COLUMN REINFORCEMENT										WALL REINFORCEMENT	
FROM	TO			WC-1	WC-2	WC-3	WC-4	WC-5	WC-6	WC-7	WC-8			HORIZONTAL	VERTICAL
1ST	2ND	VARIES	6,000 PSI	8#9	10#9	12#9	10#9	8#9	12#9	12#9	10#9			#4@12 EF	#6@12 EF
2ND	3RD		6,000 PSI	8#9	10#9	12#9	10#9	8#9	12#9	12#9	10#9			#4@12 EF	#4@12 EF
3RD	5TH		6,000 PSI	8#7	10#7	12#7	10#7	8#7	12#7	12#7	10#7			#4@12 EF	#4@12 EF
5TH	6TH		6,000 PSI	8#7	10#7	12#7	10#7	8#7	12#7	12#7	10#7			#4@12 EF	#4@12 EF
6TH	7TH		5,000 PSI	8#5	10#5	12#5	10#5	8#5	12#5	10#5	10#5			#4@12 EF	#4@12 EF
7TH	8TH		5,000 PSI	8#5	10#5	12#5	10#5	8#5	12#5	10#5	10#5			#4@12 EF	#4@12 EF
8TH	26TH		5,000 PSI	8#5	10#5	12#5	10#5	8#5	12#5	10#5	10#5			#4@12 EF	#4@12 EF
							WC-9	WC-10	WC-11	WC-12	WC-13	WC-14	WC-15		
1ST	2ND	VARIES	6,000 PSI				8#9	6#9	4#9	14#9	12#9	12#9	6#9	#4@12 EF	#5@12 EF
2ND	3RD		6,000 PSI				8#9	6#9	4#9	14#9	12#9	12#9	6#9	#4@12 EF	#4@12 EF
3RD	5TH		6,000 PSI				8#7	6#7	4#7	12#9		12#9	6#7	#4@12 EF	#4@12 EF
5TH	6TH		6,000 PSI				8#7	6#7	4#7	12#9		12#9	6#7	#4@12 EF	#4@12 EF
6TH	7TH		5,000 PSI				8#7	6#7	4#7	14#9	12#7	12#9	6#7	#4@12 EF	#4@12 EF

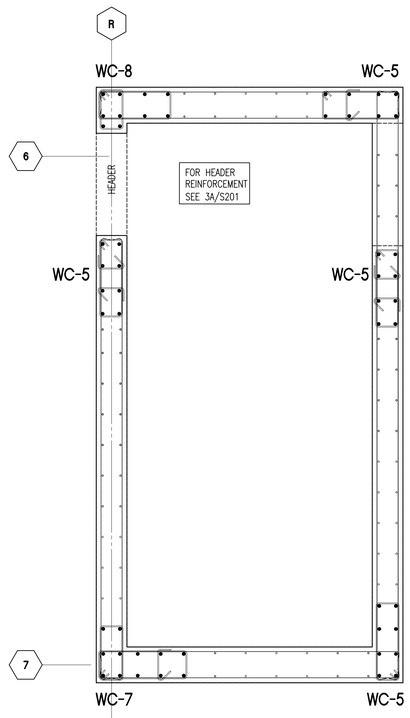

2 SHEAR WALL CORE 2 - LEVEL 2ND
SCALE : 1/2" = 1'-0"
GRAPHIC SCALE 0 6" 1' 2'

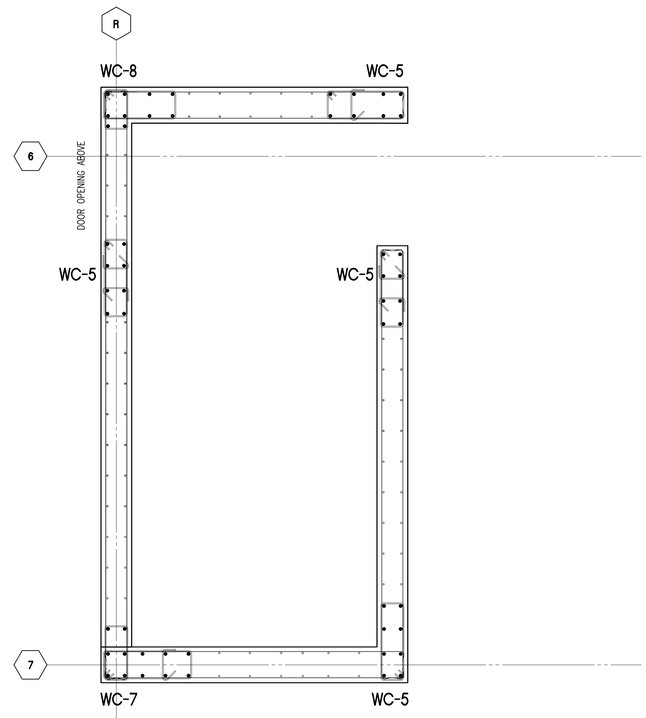

1 SHEAR WALL STAIR 2 - GROUND LEVEL
SCALE : 1/2" = 1'-0"
GRAPHIC SCALE 0 6" 1' 2'

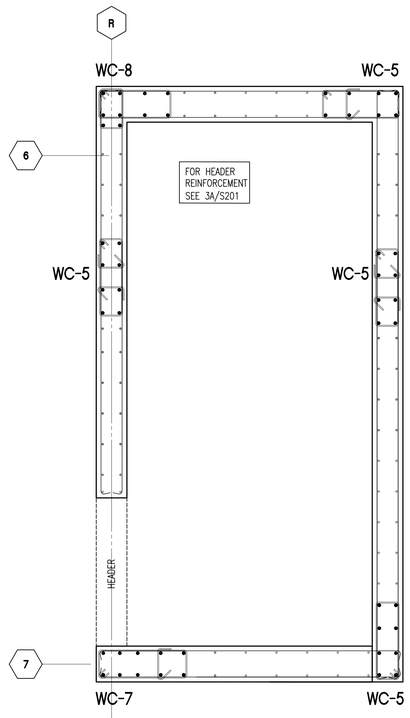

4 SHEAR WALL CORE 2 - LEVEL 6TH
SCALE : 1/2" = 1'-0"
GRAPHIC SCALE 0 6" 1' 2'

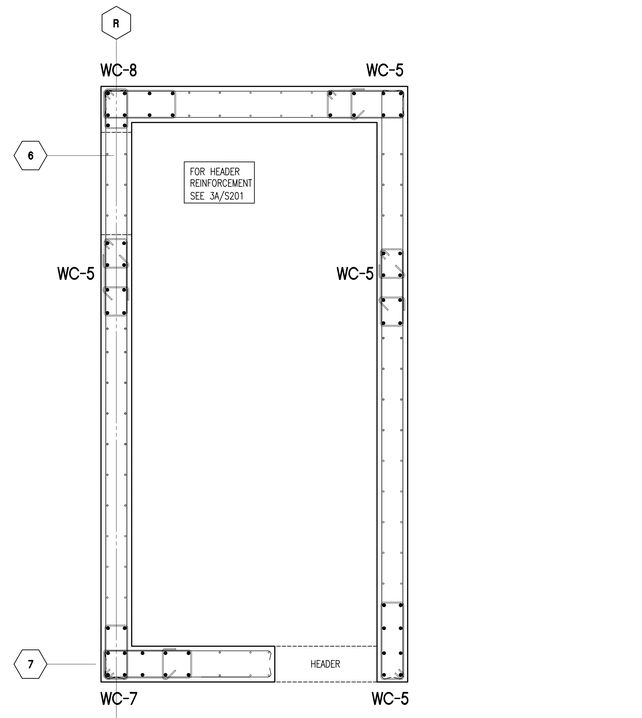

3 SHEAR WALL CORE 2 - LEVEL 3RD-5TH
SCALE : 1/2" = 1'-0"
GRAPHIC SCALE 0 6" 1' 2'

AISE
ALLISON IDE
STRUCTURAL ENGINEERS LLC
900 Fort Street Mall Suite 1670
Honolulu, HI 96813-3717
808 536 2108
johnallison@allisonide.com

JOHN S. ALLISON
LICENSED PROFESSIONAL ENGINEER
No. 5933-S
HAWAII, U.S.A.

Signature
Expiration Date:

This work was prepared by me or under my supervision. Construction of this project will be under my observation. Observation as defined in Section 16-115-2, Hawaii Administrative Rules 8-12-02 Title 16, Chapter 115, Professional Engineers, Architects, Surveyors, and Landscape Architects.

DEVELOPER:
CALIFORNIA INVESTMENT REGIONAL CENTER, LLC

PROJECT OWNER:
HAWAII CITY PLAZA, LP

Hawaii City Plaza
Honolulu, Hawaii
710 Sheridan Street
TMK 2-3-014: Parcels 002, 004, & 011

PERMIT SET

DATE 2019 MARCH 19
AISE JOB No 17001.TD

1	2018 11-16	

SHEET TITLE
STAIR 2 GROUND - 6TH LEVEL

SHEET NO.
S704

J:\2017 JOBS\17001.TD Hawaii City Plaza\100 March 11, 2018 Items Missing DWG March 11, 2018\17001.TD S701-2-3-4-5-6-7 CORE PLANS.dwg, 3/22/2019 1:28:04 PM, AutoCAD PDF (General Documentation).pc3

NOTES:

1. SEE S005 STANDARD DETAILS FOR WALL REINFORCEMENT NOT SHOWN.
2. THE SPACE BETWEEN THE LAST VERTICAL REINF. @ WALL COL. AND THE FIRST WALL WEB VERTICAL REINF. SHALL BE NO MORE THAN 8"
3. WALL COLUMN REINF. SHALL BE TENSION LAP SPLICED. SEE TABLE 6/S003 FOR SPLICE LENGTH.
4. AT TRANSITION LEVELS, WALL COLUMN REINF. AND REINF. CAGE SHALL EXTEND @ LEAST ONE LEVEL BELOW AND DOWEL ACCORDINGLY.
5. WALL COLUMN FOUNDATION DOWELS SHALL BE ONE SIZE LARGER THAN THE VERTICAL BARS, EXCEPT FOR #11 BARS.
6. FOR HEADER AND SILL, SEE SHEET S201.
7. USE #3 WALL COLUMNS TIES# @ 12" o.c. SPACE.
8. USE WALL REINFORCEMENT SCHEDULE UNLESS OTHERWISE NOTED ON ELEVATIONS.

SYMBOLS:
- ● WALL COLUMN VERTICAL REINFORCEMENT
- ○ EXTENDED VERTICAL BAR FROM WALL ABOVE OR BELOW

CORE WALL REINFORCEMENT SCHEDULE

LEVELS		WALL THKS	f'c CONC STRENGTH	WALL-COLUMN REINFORCEMENT										WALL REINFORCEMENT	
FROM	TO			WC-1	WC-2	WC-3	WC-4	WC-5	WC-6	WC-7	WC-8			HORIZONTAL	VERTICAL
1ST	2ND	VARIES	6,000 PSI	8#9	10#9	12#9	10#9	8#9	12#9	12#9	10#9			#4@12 EF	#6@12 EF
2ND	3RD		6,000 PSI	8#9	10#9	12#9	10#9	8#9	12#9	12#9	10#9			#4@12 EF	#4@12 EF
3RD	5TH		6,000 PSI	8#7	10#7	12#7	10#7	8#7	12#7	12#7	10#7			#4@12 EF	#4@12 EF
5TH	6TH		6,000 PSI	8#7	10#7	12#7	10#7	8#7	12#7	12#7	10#7			#4@12 EF	#4@12 EF
6TH	7TH		5,000 PSI	8#5	10#5	12#5	10#5	8#5	12#5	10#5	10#5			#4@12 EF	#4@12 EF
7TH	8TH		5,000 PSI	8#5	10#5	12#5	10#5	8#5	12#5	10#5	10#5			#4@12 EF	#4@12 EF
8TH	26TH		5,000 PSI	8#5	10#5	12#5	10#5	8#5	12#5	10#5	10#5			#4@12 EF	#4@12 EF
							WC-9	WC-10	WC-11	WC-12	WC-13	WC-14	WC-15		
1ST	2ND	VARIES	6,000 PSI				8#9	6#9	4#9	14#9	12#9	12#9	6#9	#4@12 EF	#5@12 EF
2ND	3RD		6,000 PSI				8#9	6#9	4#9	14#9	12#9	12#9	6#9	#4@12 EF	#4@12 EF
3RD	5TH		6,000 PSI				8#7	6#7	4#7	12#9		12#9	6#7	#4@12 EF	#4@12 EF
5TH	6TH		6,000 PSI				8#7	6#7	4#7	12#9		12#9	6#7	#4@12 EF	#4@12 EF
6TH	7TH		5,000 PSI				8#7	6#7	4#7	14#9	12#7	12#9	6#7	#4@12 EF	#4@12 EF

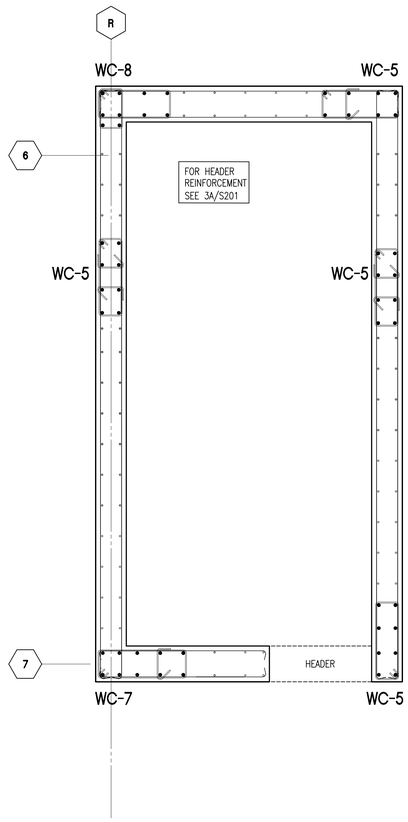

2 SHEAR WALL CORE 2 - LEVEL 8TH-ROOF
SCALE : 1/2" = 1'-0"

GRAPHIC SCALE 0 6" 1' 2'

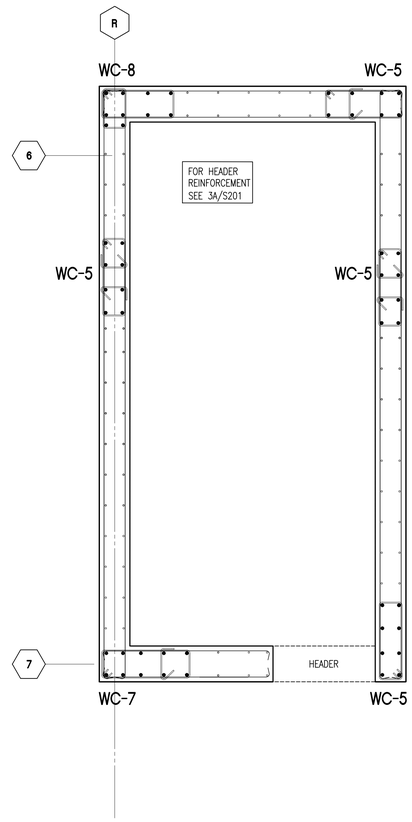

1 SHEAR WALL CORE 2 - LEVEL 7TH
SCALE : 1/2" = 1'-0"

GRAPHIC SCALE 0 6" 1' 2'

AISE
ALLISON IDE
STRUCTURAL ENGINEERS LLC
900 Fort Street Mall Suite 1670
Honolulu, HI 96813-3717
808 536 2108
johnallison@allisonide.com

JOHN S. ALLISON
LICENSED PROFESSIONAL ENGINEER
No. 5933-S
HAWAII, U.S.A.

Signature
Expiration Date:

This work was prepared by me or under my supervision. Construction of this project will be under my observation. Observation as defined in Section 16-115-2, Hawaii Administrative Rules 9-12-02 Title 16, Chapter 115, Professional Engineers, Architects, Surveyors, and Landscape Architects.

DEVELOPER:
CALIFORNIA INVESTMENT REGIONAL CENTER, LLC

PROJECT OWNER:
HAWAII CITY PLAZA, LP

Hawaii City Plaza
Honolulu, Hawaii
710 Sheridan Street
TMK 2-3-014: Parcels 002, 004, & 011

PERMIT SET

DATE 2019 MARCH 19
AISE JOB No 17001.TD

1 2018 11-16	

SHEET TITLE
STAIR 2
7TH - ROOF LEVEL

SHEET NO.
S705

C:\2017 JOBS\17001.TD Hawaii City Plaza\SD March 11, 2018 Items\Working DWG March 11, 2018\17001.TD S701-2-3-4-5-6-7 CORE PLANS.dwg, 3/22/2019 1:29:03 PM, AutoCAD PDF (General Documentation).pc3

NOTES:

1. SEE S005 STANDARD DETAILS FOR WALL REINFORCEMENT NOT SHOWN.
2. THE SPACE BETWEEN THE LAST VERTICAL REINF. @ WALL COL. AND THE FIRST WALL WEB VERTICAL REINF. SHALL BE NO MORE THAN 8"
3. WALL COLUMN REINF. SHALL BE TENSION LAP SPLICED. SEE TABLE 6/S003 FOR SPLICE LENGTH.
4. AT TRANSITION LEVELS, WALL COLUMN REINF. AND REINF. CAGE SHALL EXTEND @ LEAST ONE LEVEL BELOW AND DOWEL ACCORDINGLY.
5. WALL COLUMN FOUNDATION DOWELS SHALL BE ONE SIZE LARGER THAN THE VERTICAL BARS, EXCEPT FOR #11 BARS.
6. FOR HEADER AND SILL, SEE SHEET S201.
7. USE #3 WALL COLUMNS TIES# @ 12" o.c. SPACE.
8. USE WALL REINFORCEMENT SCHEDULE UNLESS OTHERWISE NOTED ON ELEVATIONS.

SYMBOLS:
- ● WALL COLUMN VERTICAL REINFORCEMENT
- ○ EXTENDED VERTICAL BAR FROM WALL ABOVE OR BELOW

CORE WALL REINFORCEMENT SCHEDULE

LEVELS		WALL THKS	f'c CONC STRENGTH	WALL-COLUMN REINFORCEMENT										WALL REINFORCEMENT	
FROM	TO			WC-1	WC-2	WC-3	WC-4	WC-5	WC-6	WC-7	WC-8			HORIZONTAL	VERTICAL
1ST	2ND	VARIES	6,000 PSI	8#9	10#9	12#9	10#9	8#9	12#9	12#9	10#9			#4@12 EF	#6@12 EF
2ND	3RD		6,000 PSI	8#9	10#9	12#9	10#9	8#9	12#9	12#9	10#9			#4@12 EF	#4@12 EF
3RD	5TH		6,000 PSI	8#7	10#7	12#7	10#7	8#7	12#7	12#7	10#7			#4@12 EF	#4@12 EF
5TH	6TH		6,000 PSI	8#7	10#7	12#7	10#7	8#7	12#7	12#7	10#7			#4@12 EF	#4@12 EF
6TH	7TH		5,000 PSI	8#5	10#5	12#5	10#5	8#5	12#5	10#5	10#5			#4@12 EF	#4@12 EF
7TH	8TH		5,000 PSI	8#5	10#5	12#5	10#5	8#5	12#5	10#5	10#5			#4@12 EF	#4@12 EF
8TH	26TH		5,000 PSI	8#5	10#5	12#5	10#5	8#5	12#5	10#5	10#5			#4@12 EF	#4@12 EF
							WC-9	WC-10	WC-11	WC-12	WC-13	WC-14	WC-15		
1ST	2ND	VARIES	6,000 PSI				8#9	6#9	4#9	14#9	12#9	12#9	6#9	#4@12 EF	#5@12 EF
2ND	3RD		6,000 PSI				8#9	6#9	4#9	14#9	12#9	12#9	6#9	#4@12 EF	#4@12 EF
3RD	5TH		6,000 PSI				8#7	6#7	4#7	12#9		12#9	6#7	#4@12 EF	#4@12 EF
5TH	6TH		6,000 PSI				8#7	6#7	4#7	12#9		12#9	6#7	#4@12 EF	#4@12 EF
6TH	7TH		5,000 PSI				8#7	6#7	4#7	14#9	12#7	12#9	6#7	#4@12 EF	#4@12 EF

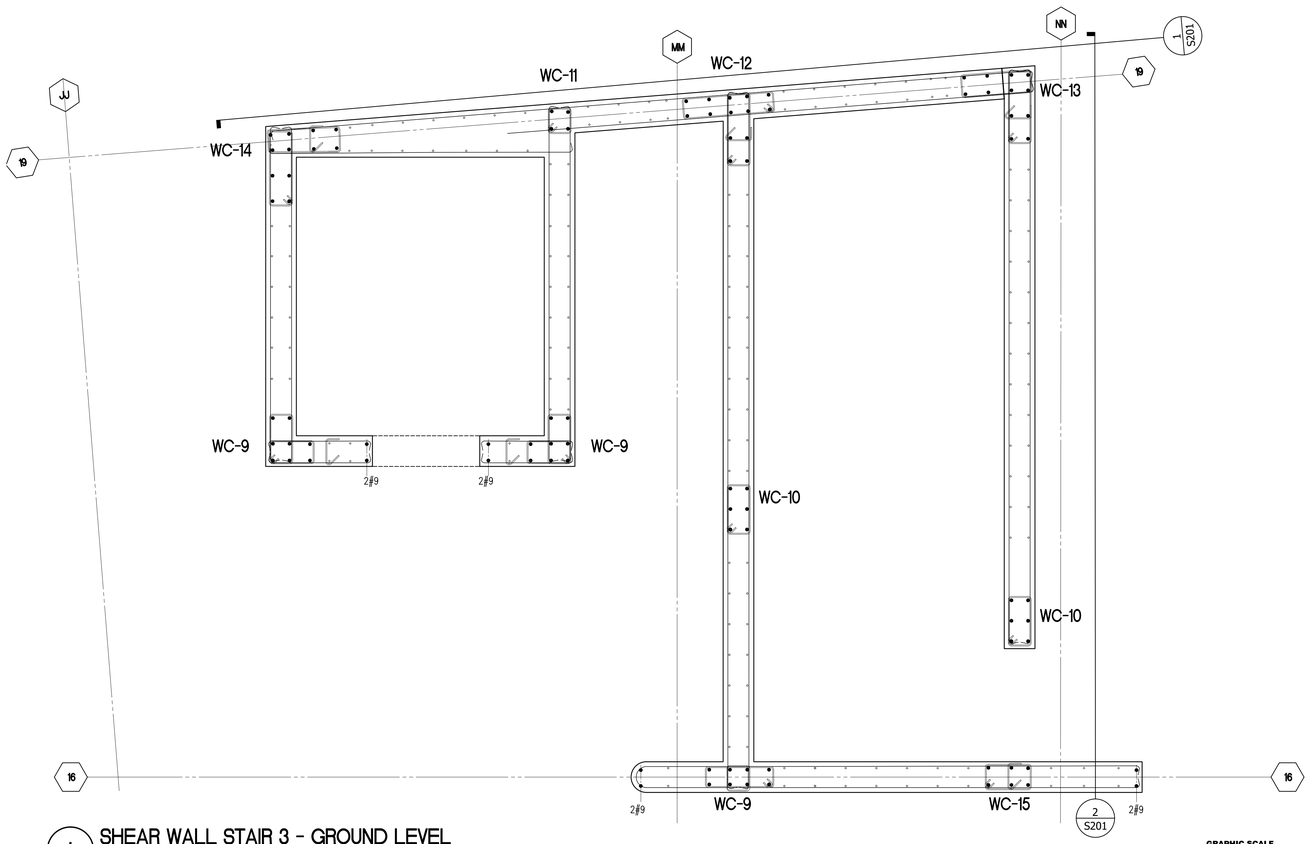

1 SHEAR WALL STAIR 3 - GROUND LEVEL
SCALE : 1/2" = 1'-0"

GRAPHIC SCALE 0 6" 1' 2'

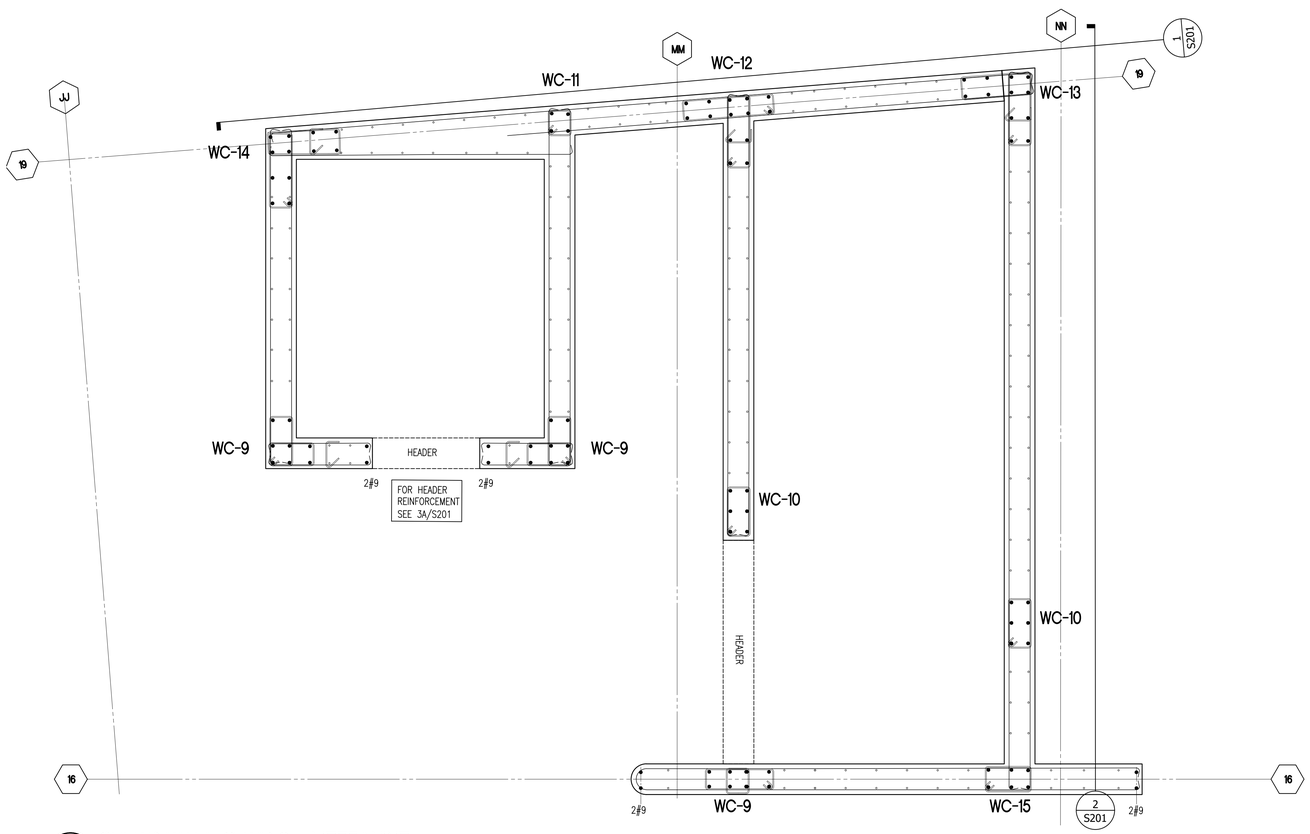

2 SHEAR WALL STAIR 3 - MEZZANINE
SCALE : 1/2" = 1'-0"

GRAPHIC SCALE 0 6" 1' 2'

AISE
ALLISON IDE
STRUCTURAL ENGINEERS LLC
900 Fort Street Mall Suite 1670
Honolulu, HI 96813-3717
808 536 2108
johnallison@allisonide.com

JOHN S. ALLISON LICENSED PROFESSIONAL ENGINEER No. 5933-S HAWAII, U.S.A.

Signature
Expiration Date:

This work was prepared by me or under my supervision. Construction of this project will be under my observation. Observation as defined in Section 16-115-2, Hawaii Administrative Rules 8-12-02 Title 16, Chapter 115, Professional Engineers, Architects, Surveyors, and Landscape Architects.

DEVELOPER:
CALIFORNIA INVESTMENT REGIONAL CENTER, LLC

PROJECT OWNER:
HAWAII CITY PLAZA, LP

Hawaii City Plaza
Honolulu, Hawaii
710 Sheridan Street
TMK 2-3-014: Parcels 002, 004, & 011

PERMIT SET

DATE 2019 MARCH 19
AISE JOB No 17001.TD

1	2018 11-16	

SHEET TITLE
STAIR 3 GROUND - 2ND LEVEL

SHEET NO.
S706

X:\17001.TD\Hawaii City Plaza TOD March 11 2018 Items\Working DWG March 11 2018\17001.TD S701-2-3-4-5-6-7 CORE PLANS.dwg, 3/22/2019 1:20:44 PM, AutoCAD PDF (General Documentation).pc3

NOTES:

1. SEE S005 STANDARD DETAILS FOR WALL REINFORCEMENT NOT SHOWN.
2. THE SPACE BETWEEN THE LAST VERTICAL REINF. @ WALL COL. AND THE FIRST WALL WEB VERTICAL REINF. SHALL BE NO MORE THAN 8"
3. WALL COLUMN REINF. SHALL BE TENSION LAP SPLICED. SEE TABLE 6/S003 FOR SPLICE LENGTH.
4. AT TRANSITION LEVELS, WALL COLUMN REINF. AND REINF. CAGE SHALL EXTEND @ LEAST ONE LEVEL BELOW AND DOWEL ACCORDINGLY.
5. WALL COLUMN FOUNDATION DOWELS SHALL BE ONE SIZE LARGER THAN THE VERTICAL BARS, EXCEPT FOR #11 BARS.
6. FOR HEADER AND SILL, SEE SHEET S201.
7. USE #3 WALL COLUMNS TIES# @ 12" o.c. SPACE.
8. USE WALL REINFORCEMENT SCHEDULE UNLESS OTHERWISE NOTED ON ELEVATIONS.

SYMBOLS:

● WALL COLUMN VERTICAL REINFORCEMENT
○ EXTENDED VERTICAL BAR FROM WALL ABOVE OR BELOW

CORE WALL REINFORCEMENT SCHEDULE

LEVELS		WALL THKS	f'c CONC STRENGTH	WALL-COLUMN REINFORCEMENT										WALL REINFORCEMENT	
FROM	TO			WC-1	WC-2	WC-3	WC-4	WC-5	WC-6	WC-7	WC-8			HORIZONTAL	VERTICAL
1ST	2ND	VARIES	6,000 PSI	8#9	10#9	12#9	10#9	8#9	12#9	12#9	10#9			#4@12 EF	#6@12 EF
2ND	3RD		6,000 PSI	8#9	10#9	12#9	10#9	8#9	12#9	12#9	10#9			#4@12 EF	#4@12 EF
3RD	5TH		6,000 PSI	8#7	10#7	12#7	10#7	8#7	12#7	12#7	10#7			#4@12 EF	#4@12 EF
5TH	6TH		6,000 PSI	8#7	10#7	12#7	10#7	8#7	12#7	12#7	10#7			#4@12 EF	#4@12 EF
6TH	7TH		5,000 PSI	8#5	10#5	12#5	10#5	8#5	12#5	10#5	10#5			#4@12 EF	#4@12 EF
7TH	8TH		5,000 PSI	8#5	10#5	12#5	10#5	8#5	12#5	10#5	10#5			#4@12 EF	#4@12 EF
8TH	26TH		5,000 PSI	8#5	10#5	12#5	10#5	8#5	12#5	10#5	10#5			#4@12 EF	#4@12 EF
							WC-9	WC-10	WC-11	WC-12	WC-13	WC-14	WC-15		
1ST	2ND	VARIES	6,000 PSI				8#9	6#9	4#9	14#9	12#9	12#9	6#9	#4@12 EF	#5@12 EF
2ND	3RD		6,000 PSI				8#9	6#9	4#9	14#9	12#9	12#9	6#9	#4@12 EF	#4@12 EF
3RD	5TH		6,000 PSI				8#7	6#7	4#7	12#9		12#9	6#7	#4@12 EF	#4@12 EF
5TH	6TH		6,000 PSI				8#7	6#7	4#7	12#9		12#9	6#7	#4@12 EF	#4@12 EF
6TH	7TH		5,000 PSI				8#7	6#7	4#7	14#9	12#7	12#9	6#7	#4@12 EF	#4@12 EF

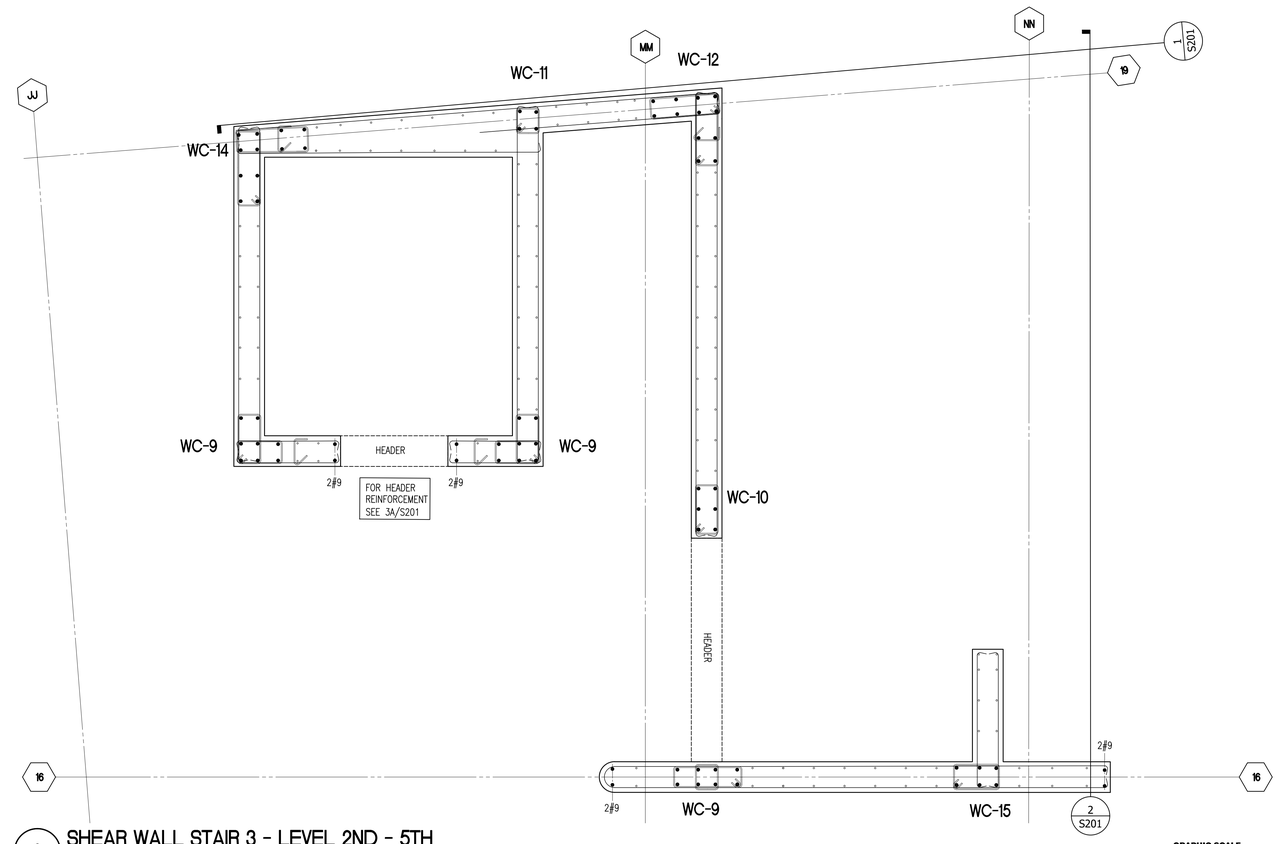

1 SHEAR WALL STAIR 3 - LEVEL 2ND - 5TH
SCALE : 1/2" = 1'-0"

GRAPHIC SCALE 0 6" 1' 2'

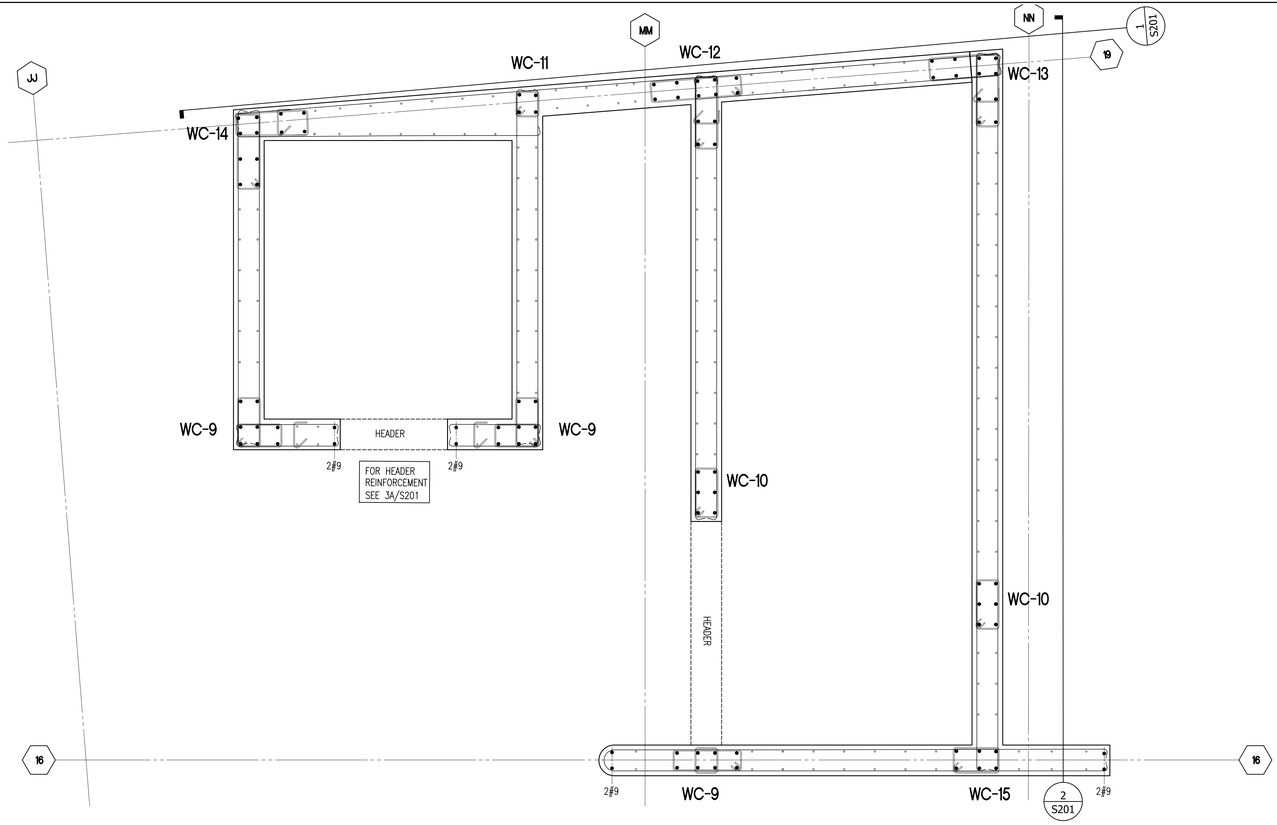

2 SHEAR WALL LEVEL 6TH
SCALE : 1/2" = 1'-0"

GRAPHIC SCALE 0 6" 1' 2'

ALISON IDE
STRUCTURAL ENGINEERS LLC
900 Fort Street Mall Suite 1670
Honolulu, HI 96813-3717
808 536 2108
johnallison@allisonide.com

JOHN S. ALLISON
LICENSED PROFESSIONAL ENGINEER
No. 5933-S
HAWAII, U.S.A.

Signature
Expiration Date

This work was prepared by me or under my supervision. Construction of this project will be under my observation. Observation as defined in Section 16-115-2, Hawaii Revised Administrative Rules 3-12-02 Title 16, Chapter 115, Professional Engineers, Architects, Surveyors, and Landscape Architects.

DEVELOPER:
CALIFORNIA INVESTMENT REGIONAL CENTER, LLC

PROJECT OWNER:
HAWAII CITY PLAZA, LP

Hawaii City Plaza
Honolulu, Hawaii
710 Sheridan Street
TMK 2-3-014: Parcels 002, 004, & 011

PERMIT SET

DATE 2019 MARCH 19
AISE JOB No 17001.TD

1 2018 11-16	

SHEET TITLE

STAIR 3
3RD LEVEL - ROOF LEVEL

SHEET NO.

S707

X:\17001.AISE\17001.10 Hawaii City Plaza\100 Master 11-2018\Working DWG Master 11-2018\17001.10 S701-2-3-4-5-6-7 CORE PLANS.dwg, 3/22/2019 1:29:13 PM, AutoCAD PDF (General Documentation).pc3